Mātauranga House

33 Bowen Street Wellington

Targeted Detailed Seismic Assessment Report

Ministry of Education

Revision: 1

2022-04-13

aurecon

Bringing ideas to life

Document control record

Document prepared by:

Aurecon New Zealand Limited
Spark Central
Level 8, 42-52 Willis Street
Wellington 6011
PO Box 1591
Wellington 6140
New Zealand

T +64 4 472 9589
F +64 4 472 9922
E wellington@aurecongroup.com
W aurecongroup.com

Document control						aurecon
Report title	Targeted Detailed Seismic sessment Report					
Document code	REP-ST-0001		**Projec number**	521185		
File path	https://aurecongroup.share oint.com/:w:/r/sites/521185/_layouts/15/Doc.aspx?sourcedoc=%7B89F8E8AA E86 BE6-9FA3-DFD0209D9861%7D&file=33 0Bowen%20St%20TDSA%20Report%20-%20Draft.docx&action=default&mobileredirect=true					
Client	Ministry o Edu ation					
Client contact	Hamish Mc aw		**Client reference**			
Rev	**Date**	**Rev ion details/status**	**Author**	**Reviewer**	**Verifier** (if required)	**Approver**
0	2022-03-30	Iss as Draft	9(2)(a)	9(2)(a)		9(2)(a)
1	2022-0 3	Final	9 9(2)(a)	9(2)(a)		9(2)(a)
Curre t revision	1					

Approval			
Author signature	9(2)(a)	Approver signature	9(2)(a)
Name		Name	
Title		Title	

Executive Summary

Scope and Basis of Assessment

This report presents the findings of the Targeted Detailed Seismic Assessment (TDSA) of Mātauranga House at 33 Bowen Street, Wellington. Aurecon understands that the Ministry of Education (MoE) currently lease office space within this building.

The TDSA was completed in accordance with the updated Section *C5 – Concrete Buildings – Proposed Revision to the Engineering Assessment Guidelines* (known as the Yellow Book), dated November 2018. The building is considered to be an Importance Level 2 (IL2) structure, located on a Site Subsoil Class C site as defined by NZS 1170.5:2004. Where the New Zealand assessment guidelines did not provide sufficient information (the diaphragm accelerations and non-linear pushover analysis), ASCE 7 and ASCE 41 were utilised.

The targeted elements include:

- Reinforced Concrete (RC) Moment Resisting Frames (MRFs)
- Precast flooring including Beta slab units
- Column tie connections to the main structure
- Diaphragms
- Original stairs
- 2014 added Stairs
- FRP column strengthening
- Lateral deflection

Elements, but not limited to, that are excluded in the TDSA include:

- Foundations (piles, basements walls, ground anchors)
- Base shear takeout
- Displacement capacity of the "gravity" frames
- Plantroom
- Non-structural building elements (façade glass, ceilings, internal walls, overhead services)
- Other secondary structure

Results Summary

Table 1 below presents a summary of the results based on the updated *Section C5 – Concrete Buildings – Proposed Revision to the Engineering Assessment Guidelines*, dated November 2018.

Table 1 Summary of Targeted Elements %NBS scores

Element	*%NBS*(IL2)	Commentary
Transverse Direction – RC MRFs (East-West)	100%	▪ The MRFs have sufficient capacity to resist 100% ULS loading. ▪ The MRFs are expected to form a weak-beam strong-column mechanism.

Longitudinal Direction – RC MRFs (North-South)	40%	▪ The MRFs have insufficient capacity to resist 100% ULS loading. ▪ This is because the RC beams do not have sufficient shear capacity to resist the flexural overstrength demands. Therefore, the RC beams are shear governed and the MRFs cannot form a reliable ductile mechanism without brittle failure occurring first. ▪ For the flexural overstrength demands, *The Guidelines* considers all reinforcement (including non-ductile mesh) within an effective width of the flange to be considered fully effective for resisting flexural loads. In our opinion, brittle materials may rupture befor the RC beams can utilise their full effective width and would res lt in a smaller flexural overstrength demand, and a higher %NBS.
Concrete Diaphragms	25%	▪ The non-ductile mesh has insufficient capacity to transf r the diaphragm loading to the MRFs. ▪ We note the score is based on specific areas of loors and not the whole floor.
Original Stairs	90%	▪ The bottom of the stairs has a retrofitted slid ng detail that is designed to allow for inter-storey rift. ▪ At 100% ULS shaking allo ing fo a 2.0/S_p factor, the retrofitted sliding detail is insufficient to nsure the stairs does not "lock-up" and impose large displa ent emands on the neighbouring structure. (S_p is a pe ormance factor related to frame ductility.)
2014 Stairs	<34%	▪ The stairs design d and on tructed in 2014 are steel stairs that are tied at the of each flight and have movement allowances at the base upport. ▪ The stairs rely epoxy anchor connections for both gravity and later l carrying capacity. In some locations, the connections are anchored into the RC beam potential plastic hinge zones (loc tions where we expect localised damage in a severe earthquake). This is not desirable. ▪ A score of <34%NBS(IL2), as opposed to a single score, is given as the epoxy anchor in a plastic hinge is an unreliable load path and is not code compliant and therefore is difficult to quantify.
Precast Flooring Units	30%	▪ Under *the Guidelines*, the precast flooring has insufficient drift capacity at 100%*NBS*(IL2) displacements. ▪ The hollowcore units score 30%*NBS*(IL2) based on the negative moment failure mode. ▪ The Stahlton ribs score 30%*NBS*(IL2) based on an insufficient seating length to ensure gravity carrying capacity is maintained under a design level earthquake (ULS).
FRP Colum strengthening	100%	▪ Under *the Guidelines*, the FRP Columns have sufficient displacement capacity for 100%*NBS*(IL2) displacements.
olumn tie connection to the main structure	100%	▪ The retrofit column tie relies on a steel member that is connected to RC columns with epoxy anchors. ▪ The epoxy anchors have insufficient capacity to resist the 2.5% of the maximum axial compression load on the RC columns. However, the columns have sufficient buckling capacity over the assumed unrestrained length (for floors that have a drift greater than 1.5%) and therefore have sufficient capacity to resist 100%ULS loading.

Precast Panels	100%	▪ The precast panels and the connections back to the main structure have sufficient capacity to resist 100%ULS parts loading. ▪ The precast panels are located and attached to the slabs at each level and do not span from slab to slab above. Hence, they are not subject to a lateral distortion from the building's inter-storey drifts.

Recommendations

We recommend the building owner undertakes a full Detailed Seismic Assessment to ensure that ll elements are reviewed and assessed prior to any strengthening design. Further geotechnical inve tigation are also required to confirm the subsoil classification of C. An initial desk top study has conside ed t e location and it is likely to be designated as subsoil classification of C.

Once the full assessment is complete, we recommend the building is seismically retr fitted to a inimum rating of 67%*NBS* (IL2). The 67%*NBS*(IL2) level is regarded as the industry standar requir ment for the strengthening of existing buildings.

Based on our targeted review, the seismic retrofit would include, but no be limited to

- Increasing the shear capacity of the MRF beams in the longitudinal direc ion with FRP or steel plate to the side faces of the beams.
- Increasing the diaphragms' tension capacity by installing st el rod und rneath the floor plate or steel plates recessed into the topping.
- Drill bolts completely through the RC beams in the pot tial plastic hinge zones for the 2014 stairs, to support the added steel beams to provide a reliable gravi carrying support
- Retrofit the hollowcore precast units considering he following failure modes:
  - Beta Units. Install strongbacks to the unders de of the beta units in accordance with the guidance in the "*Development and Validation of Retr fit Techniques for Hollow-core Floors*", dated 6 July 2021. The strongbacks are required a the eta u its' l cations from level 2 – level 12.
  - Positive moment failure. Un erta e on ite testing to confirm if the prestressing strands in the hollow-core units are poorly bonded r sufficiently bonded. If the strands are poorly bonded, then we suggest installing strongback to the underside of the units that are within the "elongation zone" from level 2 – level 12.
  - Negative moment fail re Install strongbacks to the underside of all the units from level 2 – level 12. Selective w akenin the starter/saddle bars in the concrete topping is also a possible retrofit solution.
- Retrofit the S ahlto nits considering the following:
  - Undertake o site investigations to confirm the Stahlton unit seating length
  - If the onsite investigations show that the seating length is still insufficient then we suggest increasing the s ating length by bolting steel members to the underside of the Stahlton ribs. This would occur on all levels.

Contents

1 Introduction 8

1.1 Background 8
1.2 Building Description 8
1.3 ISPS Seismic Retrofit 2014 10
1.4 Aurecon's Peer Review of the ISPS Seismic Retrofit 10
1.5 Post-earthquake reporting 10
1.6 Scope and Basis of Assessment 11
1.7 Primary Lateral Load Resisting System 12
1.7.1 Vertical Lateral Resisting Elements 12
1.7.2 Horizontal Lateral Load Resisting System 14
1.8 Gravity System 14
1.9 Foundations and Subsoil 15
1.10 Stairs 15
1.11 Cladding 16
1.12 Non-Structural Building Elements 17

2 Assessment Methodology 17

2.1 Assessment Description 17
2.2 Assessment Inputs 17
2.2.1 General 17
2.2.2 Structural Layout 17
2.2.3 Dead and Superimposed Dead Load 18
2.2.4 Live Loads 18
2.2.5 Wind Loads 18
2.2.6 Seismic Loading 18
2.2.7 Seismic Weight 19
2.2.8 Material Propert es 19
2.2.9 Geotech ical Parameters 20
2.2.10 Computer Modelling 20

3 Assessment Resul 21

3.1 Assessme t Results Summary 21
3.2 Di placements and Inter-storey Drifts 22

4 Structural W aknesses 23

4.1 General 23
4 2 P imary Lateral Resisting Systems - Moment Resisting Frames 23
4.2.1 Longitudinal Direction 23
4.2.2 Transverse Direction 25
4.3 Precast Hollowcore Units 26
4.3.1 Precast Unit Seating Loss Failure 27
4.3.2 Negative Moment Failure 27
4.3.3 Positive Moment Failure 27
4.3.4 Web Cracking 28
4.3.5 Beta Units 29
4.4 Stahlton Ribs 29

4.4.1 Seating 29
4.4.2 Positive and Negative Moment 30
4.5 Original Retrofitted Precast Stairs 30
4.6 2014 Steel Stairs 31
4.7 Diaphragms 31
4.8 Severe Structural Weaknesses 33

5 Potential Strengthening Options 3
6 Future Code Changes 34
6.1 Hazard Zone Factor 34
6.2 Basin Edge Effects 34
6.3 Seismic Guidelines 34

7 Yellow book vs Red Book 35
8 Conclusions and Recommendations 35
8.1 Conclusion 35
8.2 Recommendations 36

9 Explanatory Notes 36

Appendix:

A. Assessment Summary
B. Definitions
C. Importance Level Description

1 Introduction

1.1 Background

Aurecon have been engaged by Ministry of Education (MoE) to provide a Targeted Detailed Seismic Assessment (TDSA) for Mātauranga House at 33 Bowen Street Building. Refer to Figure 1.1 for the site's location. Aurecon understands that MoE currently lease office space within this building.

The TDSA focuses on life safety issues as the primary objective. This means that the earthquake co es o rating are based primarily on life safety considerations rather than damage to the building or it con nts unless this might lead to damage to adjacent property. The earthquake rating assigned is, heref r not reflective of serviceability performance.

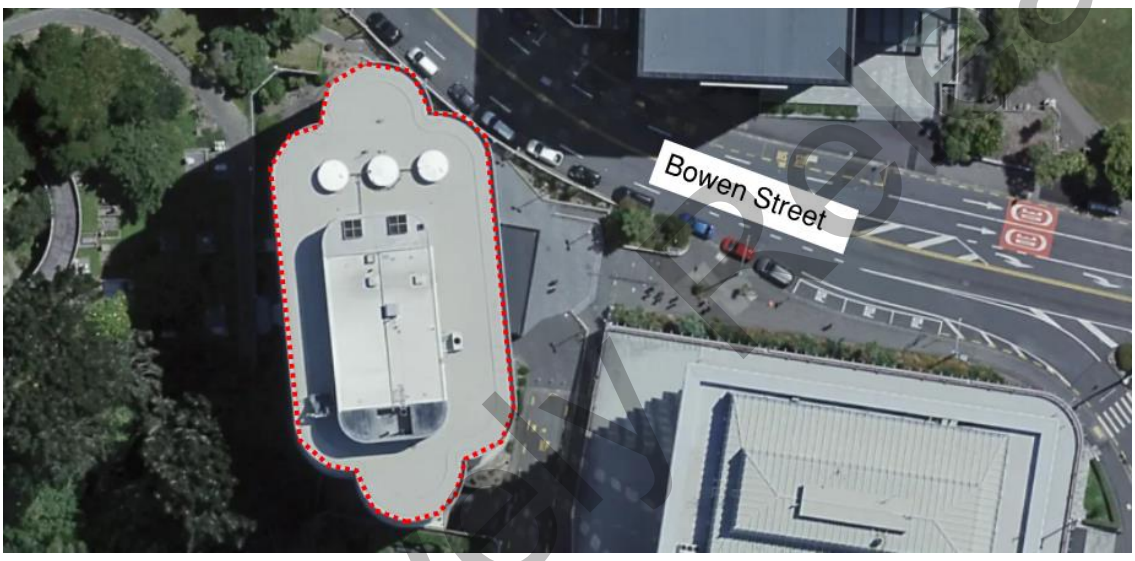

N

Figure 1 1 – Si e Location (Source: Land Information New Zealand)

1.2 Building Description

The 33 Bowen Str et buil ing is a twelve-storey reinforced concrete building, with two basement levels. It was designed by H lmes Wood Poole & Johnstone Ltd. and constructed by Fletcher Construction Ltd. circa 1987.

The flo ing s stem consists of precast-prestressed 200 hollowcore units, with 65mm topping with "non-duc le" mesh. The structural drawings indicate that the precast hollowcore units have 60mm of seating on he t p of the precast shell of the RC beams. This is typical for all upper levels except for the floor to the toilet reas which are Stahlton precast prestressed ribs with timber infills. Two very small areas at the northern an southern apexes of the building consist of insitu concrete on Hibond flooring. The floor units typically span approximately 9.0m onto the RC precast shell beams. These beams are supported on RC columns.

The lateral systems in both directions are RC moment resisting frames (MRFs). The RC frames of the building are substantial and were well-detailed for the time and have many of the desirable details required for a modern building.

The original stairs are precast RC scissor stairs with an integral mid height landing spanning between floor levels. They are tied in at the top of each flight and have movement allowances at the base support.

The building is founded on a combination of reinforced concrete pads, ground beams and belled piles. A 150mm slab on grade sits on top of these elements

A seismic retrofit of the building was undertaken in 2014, designed by ISPS Ltd. During this time a new steel stair was installed in the south-east portion, up the full height of the building. This involved creating two large voids in the existing diaphragm with fibre reinforced polymer (FRP) installed around these voids. Further detail is described in Section 1.3.

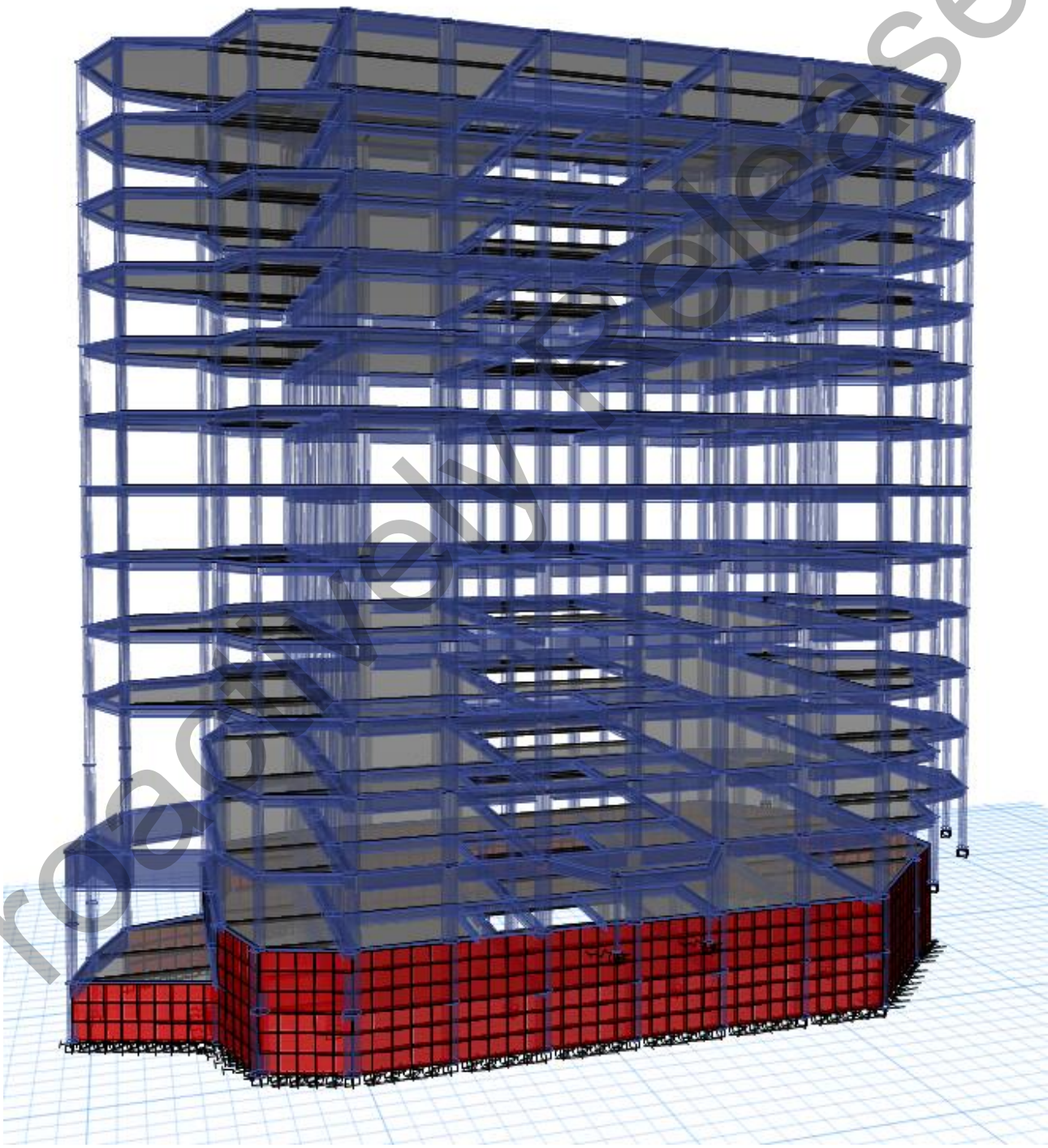

Figure 1.2– 3D View of Building ETABS Model

1.3 ISPS Seismic Retrofit 2014

In April 2014, Ian Smith Project Services (ISPS) Ltd., designed seismic retrofit works for the 33 Bowen Street building. The ISPS Design Features Report stated that once the seismic works were completed, the building would achieve a minimum of 97%*NBS* rating. The seismic works included:

- Installing steel catch brackets (75x125EAs) at the end of each hollowcore precast slab unit to increase available seating.
- Installing steel hangers at regular centres through the slab units spanning parallel to the main seismic frame beams, otherwise known as "alpha" slabs.
- Wrapping corner RC columns for the first 4 levels, with FRP to improve confinement and ductilit ov r the height of the column.
- Installing steel members beneath each floor, to tie the perimeter columns back into the d aphragm t each level.
- Installing steel members underneath the RC stairs to increase the sliding stair se ting ngth.

ISPS also designed a new steel stair that was installed up the full height of the building in t e south-east portion of the building.

1.4 Aurecon's Peer Review of the ISPS Seismic Retrofit

Aurecon New Zealand Ltd. reviewed the design of the s ismi ret it works by ISPS Ltd. Aurecon's report titled "*Ministry of Education Accommodation Project 33 Bo en Street Peer Review Report on Seismic Rating*" dated 5 August 2013, concluded that, if all of the prop sed building improvements as detailed by ISPS are satisfactorily completed, as well as the co finement on the columns described, and additional column restraints are instituted, then the buildi g will e capable of a 90% - 100%*NBS* (IL2) level. However, if these are not implemented the building is potential y ikely to be rated into an earthquake risk designation.

On 10 June 2015, Aurecon issued a l tter t tled "*33 Bowen Street – Ministry of Education Accommodation ISPS Addendum Report on Seism c C acity of Existing Building*" stating that the seismic retrofit has been appropriately considered by ISPS a d that Aurecon considered that the building has an NBS rating in the range of 90-100%.

We note that since the aikou a earthquake in 2016 and the release of the updated seismic assessment guidelines in 2017 and 20 8 the methodology of assessing and strengthening existing buildings has changed significan ly. The ISPS design was undertaken to best practice at the time and considered appropriate. Howe er, this has been overtaken by major changes in the industry.

1.5 Post-earthquake reporting

Foll wing th Kaikoura 14 November 2016 Earthquake, the building was included in the Wellington City Coun il Targeted Damage Evaluation (TDE) Programme in 2017. The focus of the programme was to ddress public safety issues by confirming the structural integrity of multi-storey buildings that had exp rienced significant shaking in the Kaikoura Earthquake.

In February 2017, ISPS issued a report titled *33 Bowen Street, Wellington Targeted Damage Evaluation*. The report stated that the following damage was observed:

- *Stahlton Rib Spalling* – This spalling was concluded to have occurred before the Kaikoura Earthquake. ISPS grouted the gap with low pressure injection grout and install steel brackets to support the Stahlton unit beyond the crack/spalled location.

- *Dycore Cracks* – Crack widths up to 3.5mm at the corner of the dycore units was observed. ISPS was not concerned as 80% of the dycore width was still supported. ISPS filled the crack with a low-pressure injection grout.
- *Corner Diaphragm Cracks* - Crack widths up to 0.6mm was observed. No actions were taken from ISPS.

ISPS report in their letter of 14th November 2016, stated that "*No structural damage was identified and consequently we believe the capacity of the structure to resist seismic actions has not been affected or degraded and remains safe for occupancy at this time*."

1.6 Scope and Basis of Assessment

The targeted detailed seismic assessment (TDSA) was completed in accordance with the guideline document *The Seismic Assessment of Existing Buildings – Technical Guidelines for Engineering Ass ssme ts*, dated July 2017 (*The Guidelines*), including the updated *Section C5 – Concrete Buildings – Pr posed Revision to the Engineering Assessment Guidelines*, dated November 2018. Where the N w Zea and assessment guidelines did not provide sufficient information (the diaphragm accelerati ns an non-linear pushover analysis), ASCE 7 and ASCE 41 were utilised. The building is considered to be n Importance Level 2 (IL2) structure, located on a Site Subsoil Class C site as defined by NZS 1170 5:20 4.

The targeted elements include:

1. RC Moment Resisting Frames
2. Precast Flooring including beta slab units.
3. Column tie connection to the main structure
4. Diaphragm
5. Stairs
6. FRP column strengthening
7. Precast Panels

The assessment included undertaking he foll wing:

- Review of original as-built st uctu al drawings
- Build a 3D ETABS m del f the superstructure in accordance with the structural drawings
- Calculate the cod design level earthquake demand based on the factors including ductility and damping
- Specific analys s of the precast floor systems using specialist software
- Specific diap agm modelling utilising specialist software and critical review of aspects such as connect ons to m in elements
- Calcula ion of the main superstructure component capacities including frame beams and columns, beam-column j ints, diaphragms and column tie connection to the main structure

  Determine the total and inter-storey drifts
- D splacement-based assessment to determine the overall inelastic mechanism, failure mode and structural ductility. This will involve a non-linear pushover analysis.
- Detailed assessment of the concrete elements as per the "Technical Proposal" requirements
- Review MRF columns for non-ductile behaviour including the FRP wrapped columns
- Calculation of the %NBS rating for the superstructure components to determine the Critical Structural Weakness (CSW)

- Identification of any potential Severe Structural Weaknesses (SSWs)
- Assessment of secondary structural components including:

  - Stairs

  - Precast Panels
- Formal in-house verification by CPEng engineer
- Descriptive methodology for any seismic strengthening if required
- Reporting – formal DSA report
- Liaison and meetings as requested

Elements that are excluded in this TDSA include, but are not limited to:

- Foundations (piles, basement walls, ground anchors)
- Base shear takeout
- Displacement capacity of the “gravity” frames
- Plantroom
- Non-structural building elements (façade glass, ceilings, internal walls ove head services)

1.7 Primary Lateral Load Resisting System

1.7.1 Vertical Lateral Resisting Elements

Building Design

Mātauranga House was originally desi ned to in orpora e the principles of ductile design. A ductile structure designed to modern codes is expecte to be ble to undergo relatively large displacements without significant loss of lateral capacity. uct e structures (strong columns and weak beams) are also able to dissipate energy and resist repeated cycles of earthquake shaking without excessive strength degradation. Buildings designed with the e feat e provide a higher level of life safety performance in severe earthquake shaking compared with her buildings without these features.

However, a framed tructure is expected to deflect laterally during significant earthquake shaking and the resulting inter-stor y drifts (relative lateral movements between adjacent levels) will likely place demands on the main fram pr cast ooring units, stairs and precast cladding panels, and other elements vulnerable to this type of disto t n.

Longitudin l direction

n the ongi udinal direction, the primary lateral resisting system of the building consists of:

- 750x 600 RC beams and 900 diameter circular columns that form ductile moment resisting frames (MRFs).
- The beams are formed from a precast concrete U-beams and a cast-in-place reinforced concrete core. The U-beams contain deformed reinforcement bars that are terminated at the beam end and are not anchored in the reinforced concrete column.
- The external beams of the frames are connected to the corner columns with a “pinned” detail which allows the corner columns to be considered as uniaxially bending columns.

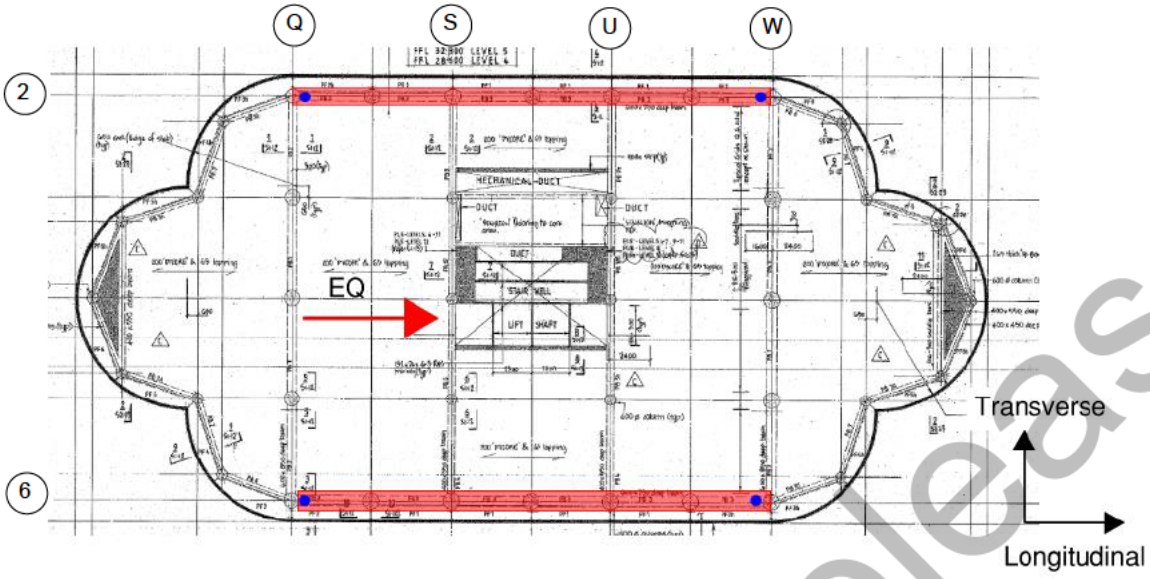

Figure 1.3 – Plan view: Longitudinal vertical late al esis ng elements

Transverse direction

In the transverse direction, the primary lateral resisting system of the building consists of:

- 850x 600 RC beams and 900 diameter circular c lumns that form ductile moment resisting frames (MRFs).
- Again, the RC beams are formed from a pr cast concrete U-beams and a cast-in-place reinforced concrete core.
- We note that beams on Grids S an U also contribute a small portion to lateral load resisting based on their stiffness and fixity to colum s.

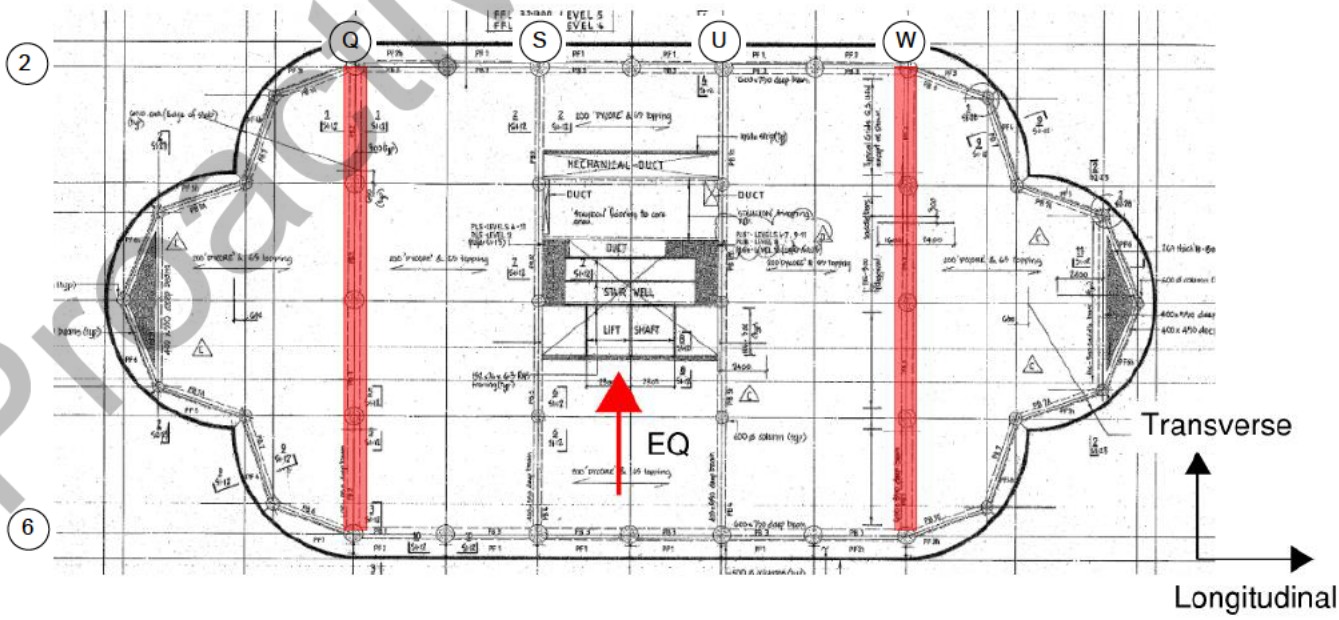

Figure 1.4 – Plan view: Transverse primary lateral resisting elements

1.7.2 Horizontal Lateral Load Resisting System

The horizontal lateral load resisting system consists of:

- A diaphragm consisting of a 65mm thick insitu concrete topping with “non-ductile” 665 Mesh. The floor slabs also have H16 staggered saddle and starter reinforcement bars over the internal and external RC beams and
- The horizontal load is transferred from the floor slab, into the RC MRFs, by staggered saddle and start r reinforcement bars along the RC beams.
- At the foundation level, the ground beams, pads, basement retaining walls and piles are designed to resist the base shear and overturning moment from seismic forces.

1.8 Gravity System

The flooring system consists of precast-prestressed 200 hollowcore units, with 65mm top ng with 665 “non-ductile” mesh. The structural drawings indicate that the precast hollowcore units have 60mm of seating on the top of the precast shell of the RC beams. In 2014, steel catch brackets (75x125EAs were installed at the end of each hollowcore precast slab unit to increase the seating. This r sulte in a to al seating length of 135mm. See Figure 1.5 below.

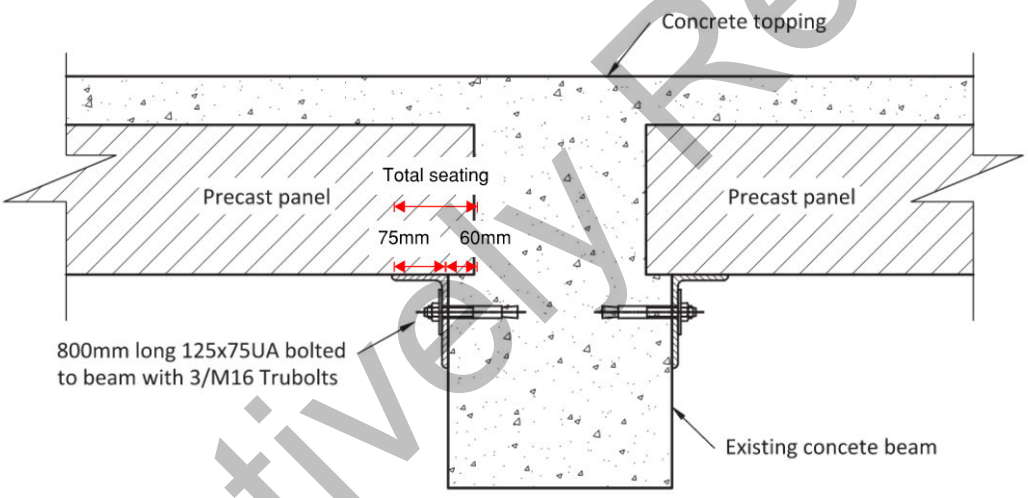

Figure 1.5 – Typical precast hollowcore unit seating detail

The hollowco e un ts with retrofitted seating are typical for all suspended levels except for the floor to the toile areas which are Stahlton ribs with timber infill. Two very small areas at the northern and southern apexes of the building consist of insitu concrete on Hibond flooring. The floor panels typically span approxi tely 9.1m onto RC precast shell beams. These beams are supported on RC columns.

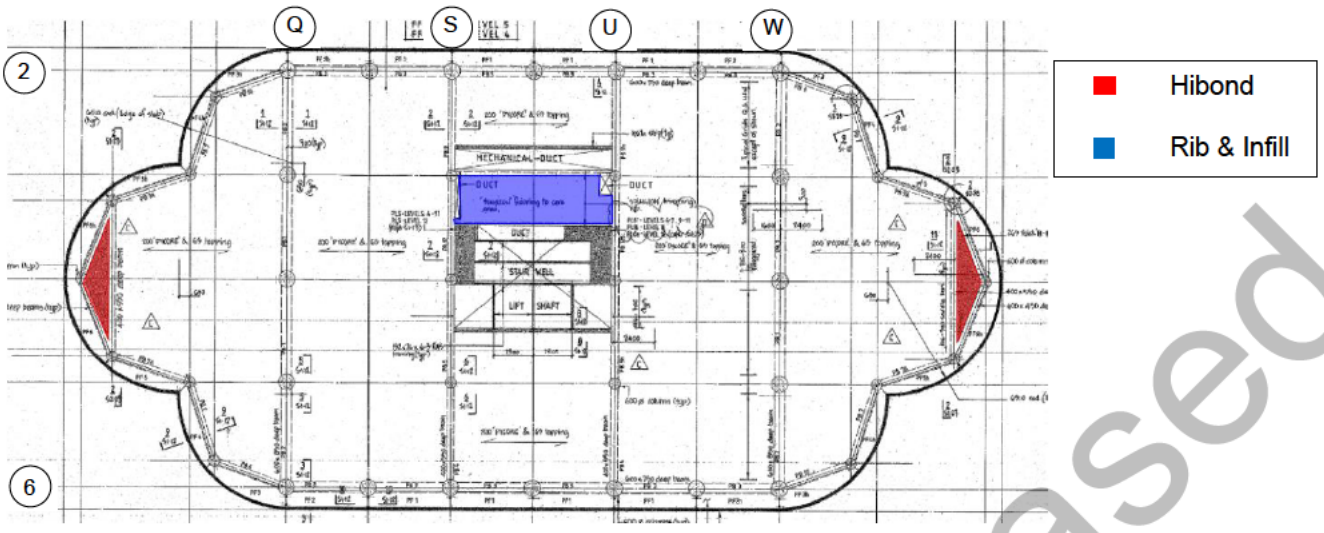

Figure 1.6 – Location of Rib and Infill flooring and Hibond

1.9 Foundations and Subsoil

The building is founded on a combination of reinforced concrete pads, ground beams and bell-piles. A 150mm slab on grade sits on top of these elements.

Based on our review of the published geology and historic ground investigations, we are using the NZS 1170.5:2004 site subsoil classification of C for this site. This was the subsoil designation adopted for the 2014 seismic strengthening.

We note that this site may be located on subsoil classification of C/D interface. Further geotechnical investigation is required to confirm the subsoil classification.

An initial desktop review of the ground subsoil profile, based on the latest findings, advised that this site has a subsoil classification of C.

1.10 Stairs

The original stairs were precast RC scissor stairs with an integral mid height landing spanning between floor levels. They are tied in at the top of each flight and have movement allowances at the base support.

The seismic retrofit of the building undertaken in 2014 included a new steel stair up the full height of the building. This was in the south-east portion of the building. This involved creating two large voids within the existing diaphragm with fibre reinforced polymer (FRP) installed around these voids.

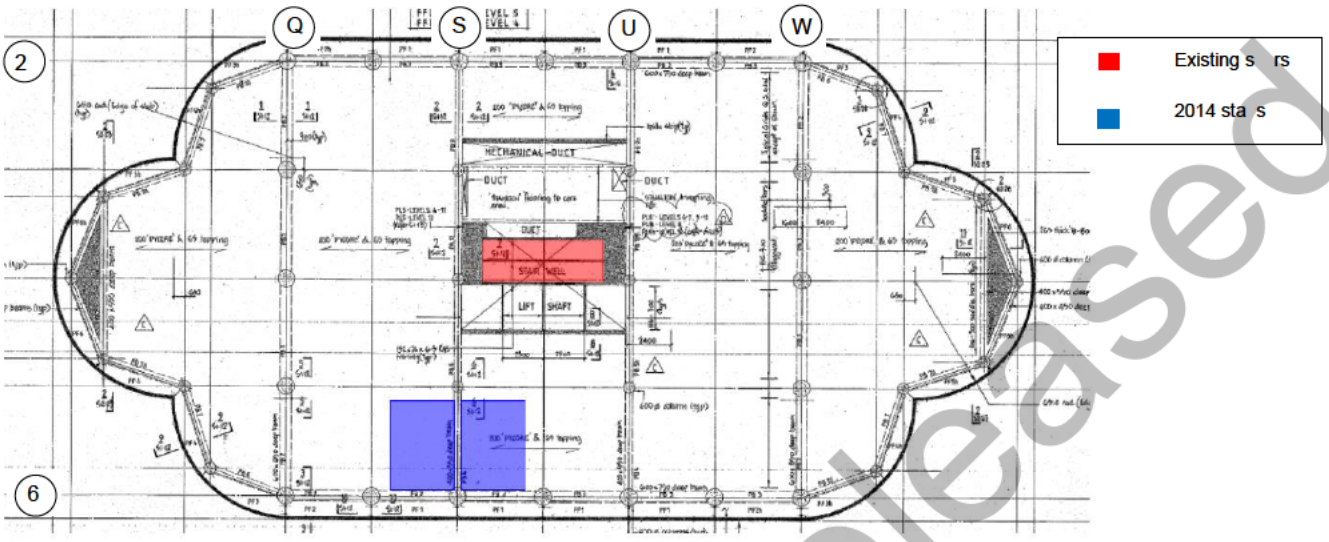

Figure 1.7 – Plan view: Stair Loc tions

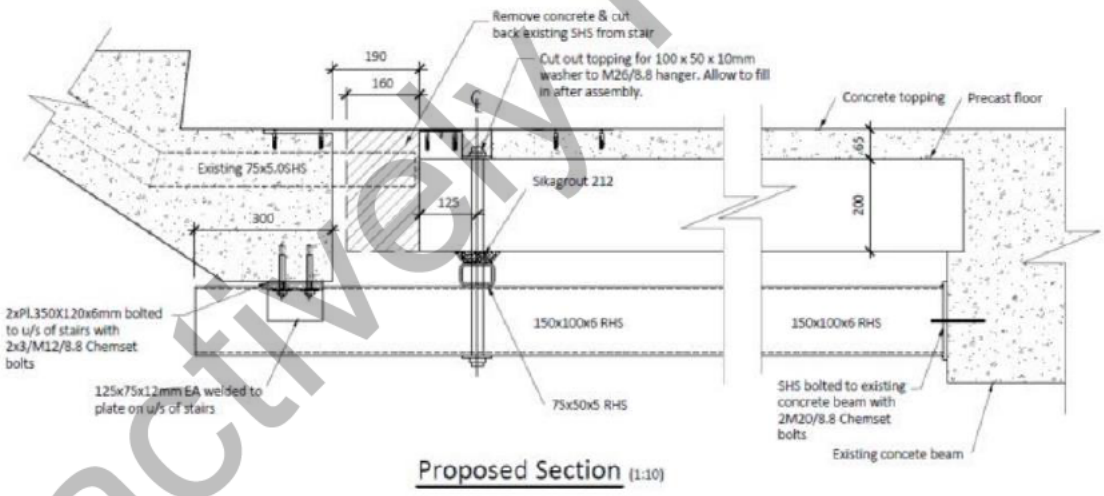

Figure 1.8 – Typical Retrofit Section of the Original Stairs

1.11 Cladding

The precast panels are located and attached to the slab edges at each level and do not span from slab to slab above. Hence, they are not subject to a lateral distortion from the building's inter-storey drifts.

We have not reviewed the cladding glazing for performance or drift.

1.12 Non-Structural Building Elements

From our recent experience in evaluating similar buildings in Christchurch and Wellington, non-structural building elements (façade glass, ceilings, internal walls, overhead services) constitute a significant portion of the repair/reinstatement cost following an earthquake. In a moderate seismic event, non-structural element damage may contribute heavily to downtime and repair costs, and therefore the performance of these non-structural elements following a moderate seismic event could affect business continuity.

Assessment of these non-structural elements' performance is not part of this Targeted Detailed Seismic Assessment.

2 Assessment Methodology

2.1 Assessment Description

The Targeted Detailed Seismic Assessment (TDSA) is a desktop study and analysis to prov de a rating for the building elements in accordance the updated *Section C5 – Concrete Build ngs Prop sed Revision to the Engineering Assessment Guidelines*, dated November 2018. These docume ts w l be referred to as the "*Guidelines*". The Guidelines provides for solutions and methods for the assess ent of existing buildings and for strengthening methodologies considered acceptable.

2.2 Assessment Inputs

2.2.1 General

The structure has been assessed at an Importance Level 2 (IL2), using a design life of 50 years in accordance with NZS 1170.0.

2.2.2 Structural Layout

The building layout, member sizes & detailing, material grades and foundation details have been taken from available design drawings and ca ulations. A site inspection of the interior and exterior was carried out to confirm that the drawin s and documentation was generally in accordance with the as-built configuration.

The following drawing documentation was available at the time of the assessment:

- *Original Structural draw ngs*, Holmes Wood Poole & Johnstone Ltd., dated 1987.
- *Design Featu s Report, 33 Bowen Street, Wellington,* ISPS Ltd., dated April 2014
- *Talavera P ope ty Group 33 Bowen Street, Wellington Critical Structural Weakness (CSW) Upgrade Building Consent Drawings*, ISPS Ltd, dated June 2014
- *Talavera Property Group 33 Bowen Street, Wellington Ministry of Education Accommodation, Alterations Diaphragm Strengthening and Feature Stair Structure Building Consent Drawings*, ISPS Ltd, dated November 2014
- *33 Bowen Street – Ministry of Education Accommodation ISPS Addendum Report on Seismic Capacity of Existing Building Letter*, Aurecon, dated 5 August 2013
- *33 Bowen Street – Ministry of Education Accommodation ISPS Addendum Report on Seismic Capacity of Existing Building,* Aurecon, dated 10 June 2015
- *33 Bowen Street, Wellington, Targeted Damage Evaluation Report,* ISPS Ltd, dated February 2017

2.2.3 Dead and Superimposed Dead Loads

The structure's dead loads include all steel frames, concrete floors and reinforced concrete foundation.

The superimposed dead loads consist of services, ceiling, roof plant.

The mass of each element making up the dead and superimposed dead loads is indicated in Table 2.1.

Table 2.1: Dead and Superimposed Dead Load Values

Load Type	Element	Mass
Dead load	Structural Steel (varies by section)	77 kN/m^3
Dead load	Concrete Members	24 kN/m^3
Superimposed dead load	Services and Suspended Ceiling	0.55 kPa

2.2.4 Live Loads

Following design live loads were adopted based on the current AS/NZS 1170.1 for the asse sment:

- Roof = 0.25 kPa (with reduction factor = 0.0 to NZS1170.5, Cl 4.2)
- Level 1-12 floor = 3.0 kPa (live load with reduction factor = 0.3 to NZS 170 0)
- Mechanical Plant = 5.0 kPa (with reduction factor = 0.6 to NZS1 70.0)
- Corridors and Stairwells = 4.0kPa (reduction factor 3 to NZS11 0.0)

2.2.5 Wind Loads

Consideration of wind loads is outside of the scope of this ass ssment.

2.2.6 Seismic Loading

The seismic loads were determined in acco danc with NZS 1170.5:2004 and NZS1170.0:2002, with the following parameters:

Table 2.2: Seismic parameters for bu ding sessments

Parameter	Va
Design Working Life (remai ing)	50 years
Importance Level	2
Return Period Fa tor ( )	1.0
Site Subsoil C assif cation	C
Pe od (sec nds)	2.20 sec (Longitudinal Direction) 2.40 sec (Transverse Direction)
Ha ard Factor (Z)	0.4

2.2.7 Seismic Weight

The seismic mass was calculated based on the NZS 1170.5:2004 loading combination $W = G + \Psi_E Q_u$, where $\Psi_E = 0.0$ for roof. Where applicable, an area reduction factor was also applied to the live load in accordance with clause 3.4.2 of AS/NZS 1170.1:2002.

Table 2.3: Seismic Weight

Level	Weight (kN)
Roof	10,036
L12	10,190
L11	10,190
L10	10,190
L9	10,190
L8	10,190
L7	10,190
L6	10,190
L5	10,190
L4	10,190
L3	9,7[illegible]3
L2	10,[illegible]9
T[illegible]al	122,289

2.2.8 Material Properties

The following material properties and corresponding recommended strength modification factors were used as per the Assessment Guide[illegible]ne Tables C5.3, C5.4 and section C6 (1.08 for steel elements and 1.5 for concrete elements)

Table 2.4: Material properties assumed for assessment purposes

Item	Characteristic Design Strength (MPa)	Assessment (Probable) Strength (MPa)
Co[illegible]crete Members	25	37.5
Grade 380 Reinforcing	380	455
Grade 300 Reinforcing	300	324
Structural Steel Rolled Sections	250-300	288-345
Structural Steel Plates	250	288

2.2.9 Geotechnical Parameters

The site subsoil classification, in terms of NZS1170.5:2004; Clause 3.1.3, is considered to be Class C.

Geotechnical hazards such as liquefaction, landslide and lateral spreading is out of our scope.

2.2.10 Computer Modelling

A computer model of the structure developed using ETABS computer program. The model is subjected to elastic response spectrum analyses (RSA) and also nonlinear pushover analyses .

The response spectrum analysis provided the basis for the distribution of seismic forces and the expect d lateral displacements up the height of the building, member/element actions, and also enabled the floor accelerations to be estimated

The nonlinear pushover analysis provided insight into the global seismic behaviour of the building, the nonlinear mechanisms and the expected local ductility demands in the primary latera loa resis ng elements. A nonlinear static pushover analysis involves monotonically increasing the la era ads at specified height until a displacement expected at ULS (the defined Ultimate Limit State shaking that is used to verify an earthquake rating of 100%NBS) is reached. P-Delta effects were aken in o account.

A building will achieve 100%NBS if the seismic demands of the plastic hinge rot ti ns at the specific displacement are within acceptable performance level. The expected pe form nce level is Life Safety in IL2 buildings.

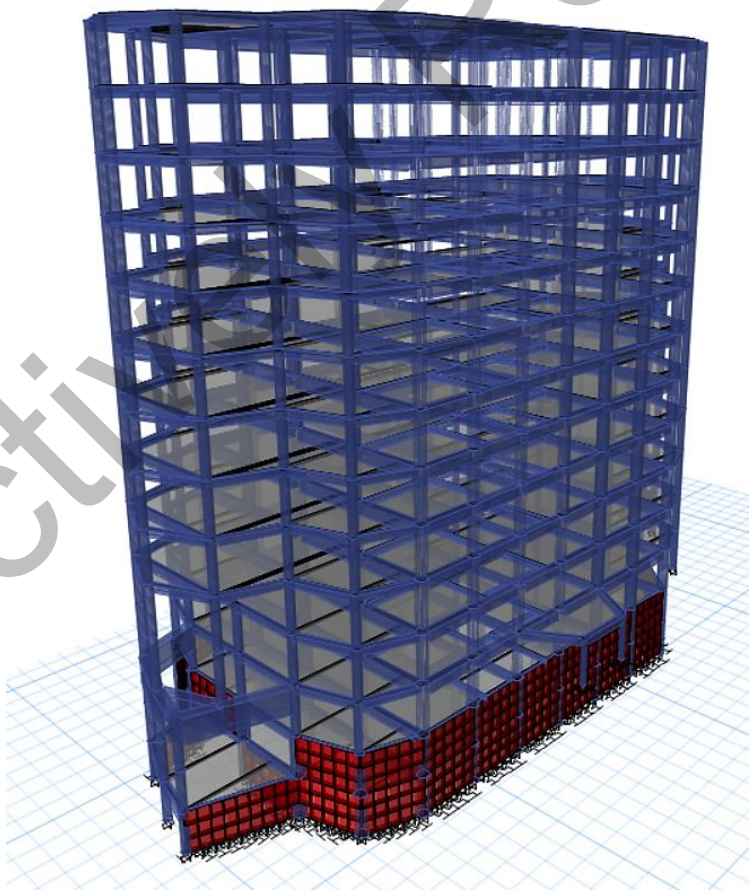

Figure 2.1 – 3D ETABS Model

3 Assessment Results

3.1 Assessment Results Summary

Table 3.1 presents a summary of the results based on the Assessment Guideline, NZS1170.5:2004 Structural Design Actions Part 5: Earthquake actions – New Zealand, NZS3101:2006 Concrete Structures Standard, ASCE41-17 and ASCE 7-16 for Diaphragms loading and Practice Advisory Note 13 for stairs. The key structural elements are considered those which are required to maintain the life-safety of the building occupants.

Table 3.1- Summary of Building Elements %NBS scores

Element	*%NBS*(IL2)	Commentary
Transverse direction – RC MRFs	100%	▪ The MRFs have sufficient capacity to re st 100 ULS loading. ▪ The MRFs are expected to form a wea be m s rong column mechanism.
Longitudinal direction – RC MRFs	40%	▪ The MRFs have insufficient capacity to resist 100% ULS loading. ▪ This is because some of th RC beams do not have sufficient shear capaci y t resis the fle ural overstrength demands. Therefor , the RC beams e shear governed and the MRFs cannot f rm a r ia ductile mechanism without brittle failure occurring fi . ▪ For the flexural verstrength demands, *The Guidelines* considers all re nforcement (including non-ductile mesh) within an effective width f the flange to be considered fully effective for resisting flexu a oads. In our opinion brittle materials may rupture before the RC beams can utilise their full effective width and would result in a sma er flexural overstrength demand.
Concrete Diaphragms	2 %	The non-ductile mesh has insufficient capacity to transfer the diaphragm loading to the MRFs. ▪ We note the score is based on specific areas of the floors and not the whole floor.
Original Stairs	90%	▪ The bottom of the stairs has a retrofitted sliding detail that is designed to allow for inter-storey drift. ▪ At 100% ULS shaking allowing for a 2.0/S_p factor, the retrofitted sliding detail is insufficient to ensure the stairs does not "lock-up" and impose large displacement demands on the neighbouring structure(S_p is a performance factor related to frame ductility).
2014 Stair	<34%	▪ The steel stairs, designed and constructed in 2014, are tied in at the top of each flight and have movement allowances at the base support. ▪ The stairs rely on epoxy anchor connections for both gravity and lateral carrying capacity. In some locations, the connections are anchored into potential plastic hinges (locations where we expect localised damage in a severe earthquake). This is not desirable.

		▪ A score of <34%NBS(IL2), as opposed to a defined score, is given as the capacity of an epoxy anchor in a plastic hinge provides an unreliable load path and is therefore difficult to quantify.
Precast Flooring Units	30%	▪ Under the *Guidelines*, the precast flooring has insufficient drift capacity at 100%*NBS*(IL2) displacements. ▪ The hollowcore units score 30%*NBS*(IL2) based on the negative moment failure mode. ▪ The Stahlton ribs score 30%*NBS*(IL2) based on an insufficient length to ensure gravity carrying capacity is maintained under a design level earthquake.
FRP Column strengthening	100%	▪ Under the *Guidelines* , the FRP Columns have sufficien displacement capacity under 100%*NBS*(IL2) displaceme s.
Column tie connection to the main structure	100%	▪ The retrofit column tie relies on a steel member hat s co nected to RC columns with epoxy anchors. ▪ The epoxy anchors have insufficient cap city to r sist the 2.5% of the maximum axial compression load How ver he columns have sufficient buckling capacity over he as umed unrestrained length (for floors that have a drift greate than 1 %) and therefore have sufficient capacity to resist 10 %ULS l ading.

3.2 Displacements and Inter storey Drifts

The building displacements up the height of the building obt ined from our analyses for 100%ULS shaking are shown in Figure 3.1. The maximum inter-storey drift under 100%ULS shaking, allowing for the k_{dm} modification factor and P-delta effects, is shown in T ble 3.2. In both directions, the drift is less than the design code limit of 2.5%.

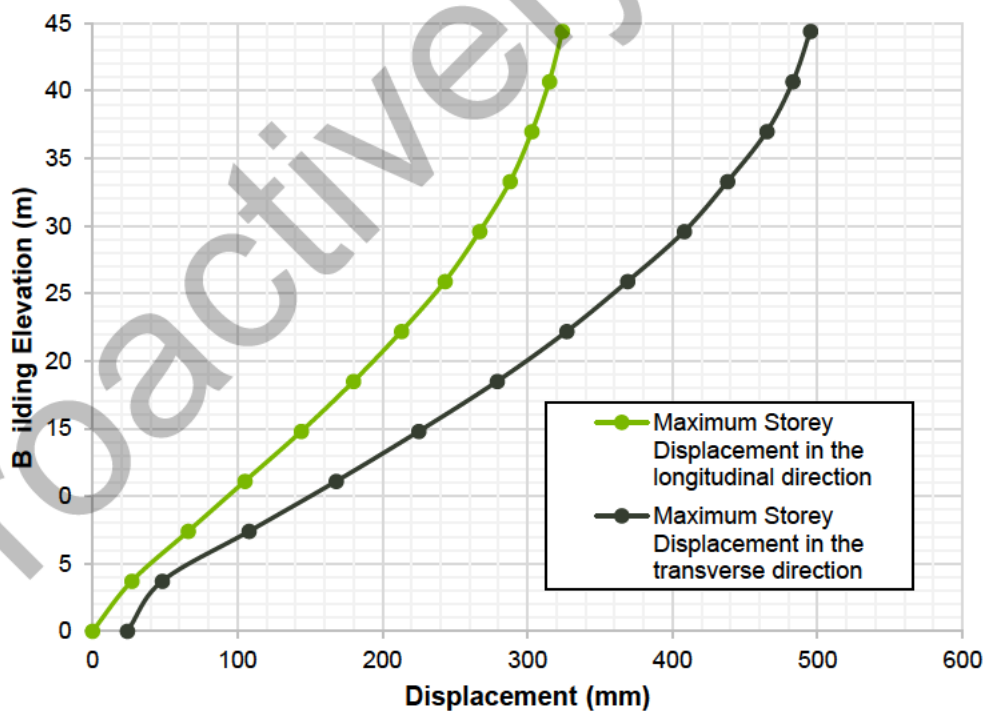

Figure 3.1 – Estimated Building Displacements for 100% ULS shaking

Table 3.2 – Estimated Maximum Inter-Storey Drift for 100% ULS shaking

Direction	Maximum Inter-storey Drift
Longitudinal	1.8%
Transverse	2.4%

4 Structural Weaknesses

4.1 General

A structural weakness is an aspect of the building structure and/or the foundation so ls that scores less than 100%*NBS*(IL2). See below for the structural weaknesses for the elements considered n thi TDSA:

- RC Moment Resisting Frames in the longitudinal direction
- Precast Flooring, including beta slab units.
- Column tie connection to the main structure
- Diaphragms
- Stairs

See below for a further description of the structural weaknes es.

4.2 Primary Lateral Resisting Systems - Moment Resisting Frames

4.2.1 Longitudinal Direction

General

In the longitudinal irection, s me of the MRF beams are shear governed and not the desired flexurally governed. Therefo e, the MRFs cannot form a reliable ductile mechanism without brittle failure occurring first under a design l vel e hquake. They cannot dissipate energy and resist repeated cycles of earthquake shaking wit out ex ssive strength degradation.

The beam ar hear governed due to the increased shear force associated with the higher bending moment. Ongoing research, included in the most recent Guidelines, indicates a higher flexural demand is expec ed when compared to the original beam design. This is due to the following:

- A larger effective width of flange from the adjacent concrete slab
- The contribution of prestressed strands from the precast floor units for the frames in the longitudinal direction.
- Shell beam contribution. For a negative moment, the flange of the U-beam can act as the compression zone of the composite beam. For a positive moment, only the cast in place reinforcement is considered.
- FRP over the RC frames. In 2014, FRP was installed around the new steel stair void, including locally on top of the seismic beams. We note that FRP may also tear under beam elongation.

- The H16@300 starter bars

The above elements are depicted in Figure 4.1.

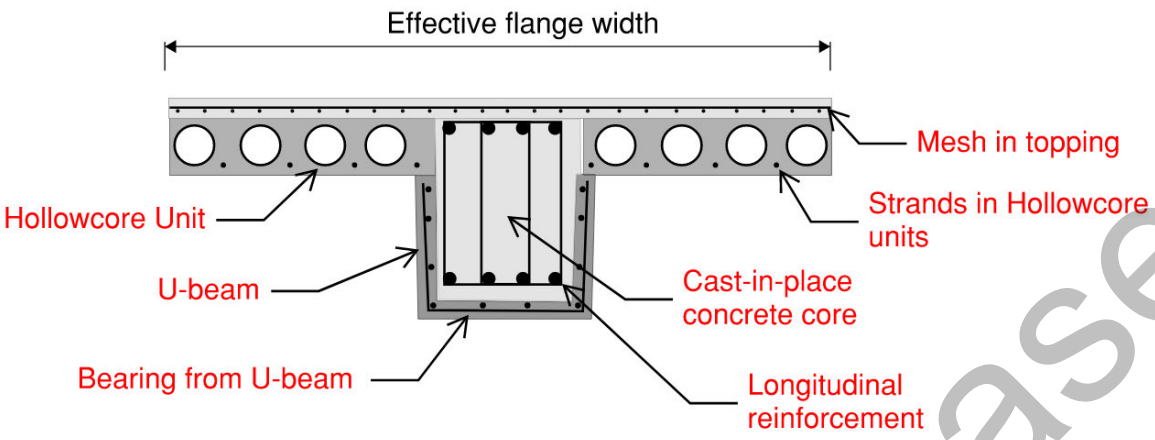

Figure 4.1 – Typical RC beam section showing elements that contribute to the flexural overstrength demands

Distribution of Cracking

A single crack may also occur in the beam's potential plastic hinge zones due to the reinforcement detailing being such that the flexural strength adjacent to the column face is materially greater than at the critical section. This is not a preferred mechanism for ductility, compared with multiple cracks in a plastic hinge zone. The U-beams are reinforced with H10 deformed bars that are terminated at the beam end and are not anchored in the reinforced concrete column. A single crack concentrates the plastic demand to a small reinforcement length and limits the amount of plastic rotation.

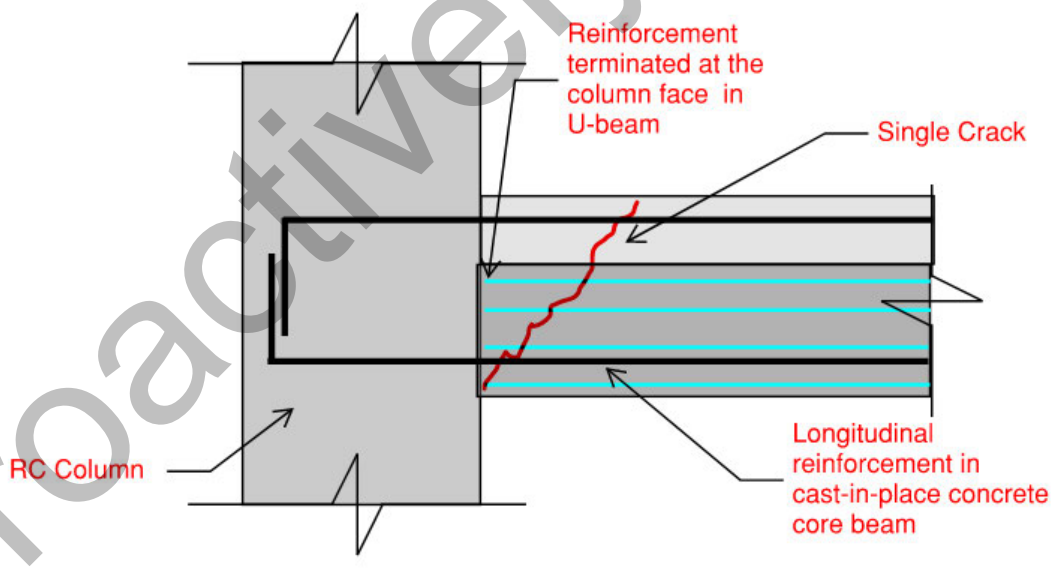

Figure 4.2 – Typical RC beam section - potential single crack in the plastic hinge zone

The single crack mechanism relies on the composite action between the U-beam and the cast-in-place concrete core. From the existing drawings, the interface between the U-beam and the cast-in-place concrete core has been intentionally roughened so that they act as a composite beam. Also, as shown in Figure 1.5

the precast concrete and insitu portion has been positively connected from the 2014 seismic retrofit steel angle angles. From our calculations, the roughened interface and anchors that connect the U-beam and the cast-in-place concrete, have sufficient capacity for the beam to act monolithically .

We note that if bond deterioration at the interface of the cast-in-place concrete core and the precast concrete U-beam occurs during seismic load reversals, distributed cracks may occur and allow for more satisfactory ductile behaviour.

We further note that the beam-column joints and the columns have sufficient capacity to resist the full flexu al beam overstrength demands.

Global Performance

The MRFs have insufficient capacity to resist 100% ULS demand. The deformed shape from the p shove analysis in the longitudinal direction at the ULS demand is shown in Figure 4.3. The green ircles show that the rotational demands on the primary columns and beams do not exceed the Life Safety limit . However, the blue and pink circles show that the rotational demands on the primary columns and b ams ceed the Life Safety limits.

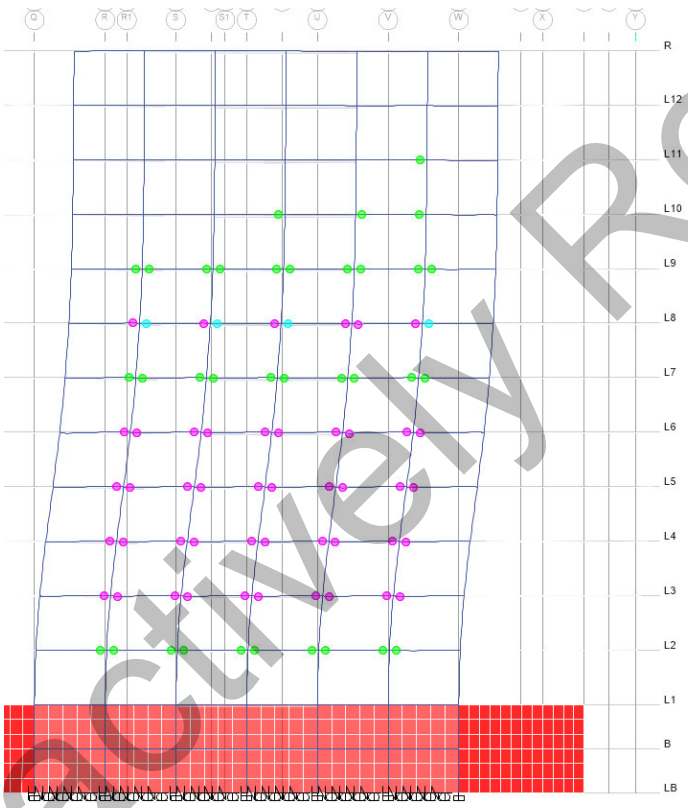

Figure 4.3 – Longitudinal Direction Plastic Hinge Status at ULS demand.

4.2.2 Transverse Direction

The MRFs have sufficient capacity to resist 100% ULS demand utilising a global ductility factor in the order of 2.5.

The deformed shape from the pushover analysis in the transverse direction at the ULS demand is shown in Figure 4.4. The green circles show that the rotational demands on the primary columns and beams do not exceed the Life Safety limits.

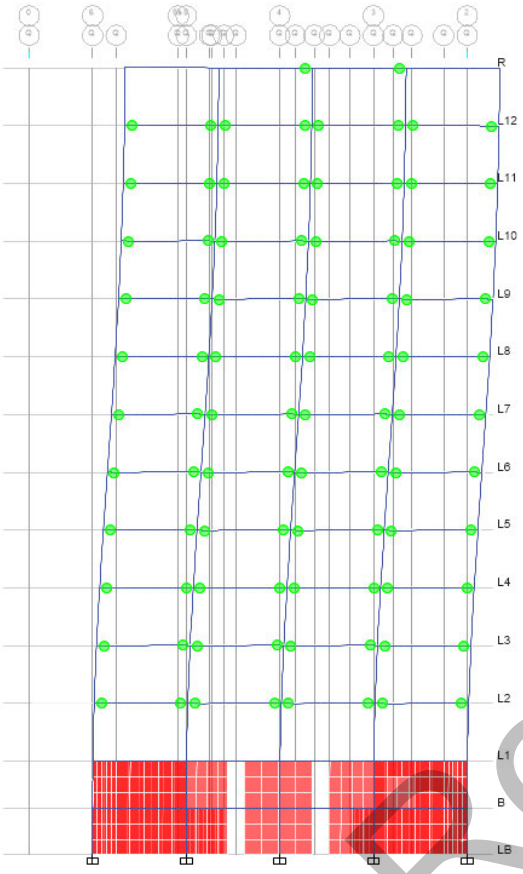

Figure 4.4 – Transverse Direction Plastic H ge Status at ULS demand.

4.3 Precast Hollowcore Units

In accordance *with Section C5 – Conc te Bu ldings – Proposed Revision to the Engineering Assessment Guidelines*, dated November 2018, he following precast flooring failure modes are considered:

- Precast Unit Seating Los Failure
- Negative Moment Failu e
- Positive Mome t Failure
- Web Cracki g
- Torsion l F ilure
- Beta Sl bs (urrently, not covered in the Guidelines)

nde these Guidelines, the *%NBS* of the precast units is given by the failure mode that has the lowest inter-torey drift capacity. The failure modes are described below. Inter-storey drift is the amount of relative lateral dis lacement from one level to adjacent level in during seismic event. Under the Guidelines, the precast flooring negative moment failure mode governs the failure modes and scores **30*%NBS*(IL2).**

The different failure modes are described in the following sections.

4.3.1 Precast Unit Seating Loss Failure

The precast hollowcore unit seating was increased by the ISPS seismic retrofit, by installing steel 75x125 unequal angles (UA) to the underside of the precast units and connecting to the existing RC beams with mechanical Trubolt anchors.

The 60mm existing seating specified in the building drawings plus the 75mm seating from the UA is considered sufficient, in accordance with the *Guidelines*, to ensure vertical carrying capacity is maintained during a severe earthquake. From the guidelines, construction tolerance, beam elongation, beam rotation, back of the unit spalling and spalling of the concrete cover was considered to determine the required seating length.

Although the retrofit provides sufficient seating in accordance with the *Guidelines*, the generally accepted design and detailing of precast floor seating has changed after the date of the seismic retrofit design. Therefore, the detailing of the seating is not in accordance with today's guideline's documents notably "*Development and Validation of Retrofit Techniques for Hollow-core Floors",* dated 6 July 2021.

We also note that the mechanical anchor bolt capacities have also been downgraded due to code amendments and C2 provisions after the seismic retrofit were complete.

4.3.2 Negative Moment Failure

This building has strong saddle reinforcing bars and as a result there is a potential for negative moment failure in severe shaking.

A negative moment failure could occur when a large crack forms on the top side of the unit away from the precast unit seating. This typically occurs when the building has strong and/or short reinforcing bars in the concrete topping over the RC beams. Based on the above the negative moment failure mode scores **30%*NBS* (IL2).**

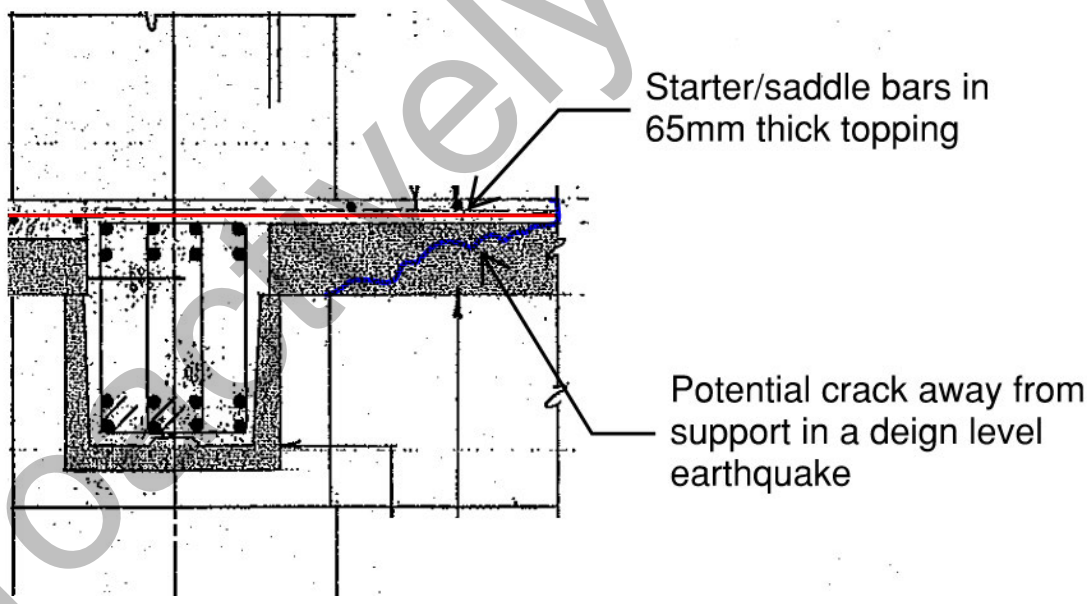

Figure 4.5 – Negative moment failure

4.3.3 Positive Moment Failure

A positive moment failure could occur when a large crack forms on the underside of the unit away from precast unit seating. Once the crack forms, beam elongation and rotation may force the crack wider. A crack

may form away from the 75mm seating from the UA in severe shaking. This is because if the prestressing strands in the hollow-core units are poorly bonded, a positive moment crack is not guaranteed to form at the edge of the seating ledge. In the absence of suitable non-destructive methods to detect poorly bonded strands, retrofits should ideally address the possibility of a positive moment crack forming away from the support.

Therefore, we note that the steel 75x125 unequal angles (UA) to the underside of the precast units is not considered reliable to mitigate a positive moment failure in a design level earthquake. Based on the above the positive moment failure mode scores **35%*NBS* (IL2).**

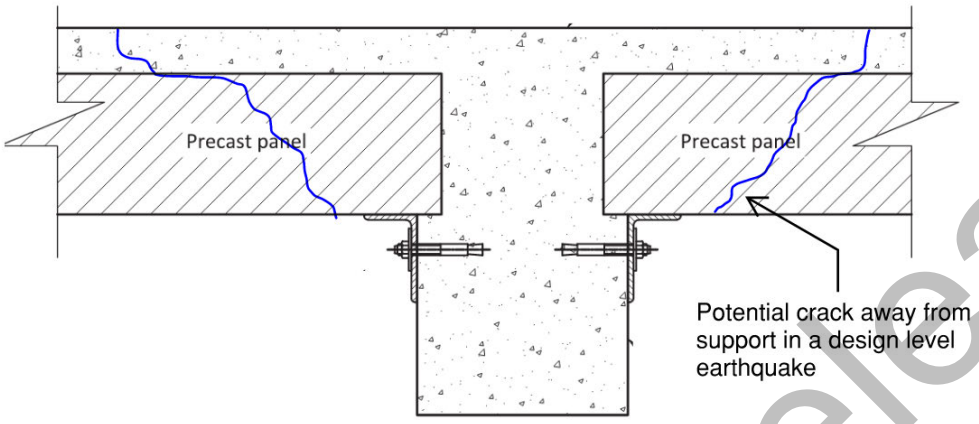

Figure 4.6 – Positi e mom nt failure

4.3.4 Web Cracking

Web cracking in the Hollowcore alpha slab units could ccur in a severe earthquake. An alpha slab is the precast unit that runs directly parallel t a s ismi frame In severe shaking, horizontal web cracking of the units may be expected in the alpha sl b units potentially causing the bottom portion of the precast unit to separate from the upper part of the unit

The ISPS seismic retrofit install d st el RHS members on the underside of the alpha slabs that may support the bottom of the unit the b ttom portion of the precast unit was to separate from the upper part of the unit.

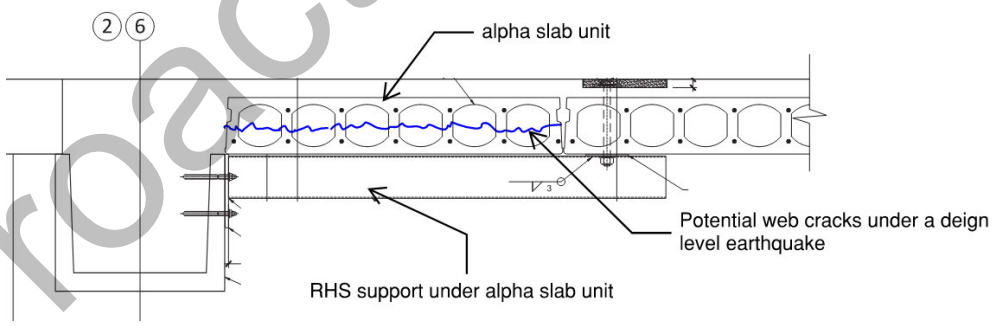

Figure 4.7 – Web cracking failure

4.3.5 Beta Units

"Beta" units are the floor units that are supported at or adjacent to an intermediate column of the RC frame. Beta units are notably not addressed in the *Guidelines*, but their susceptibility to damage has now been well documented both in the laboratory and discussed in *Development and Validation of Retrofit Techniques for Hollow-core Floors"*, dated 6 July 2021. The current guidelines suggest limiting the inter-storey drift of the building to 1.5%. The calculated drifts for the building are 1.8% longitudinally and 2.4% transversely, both greater than this recommended limit of 1.5%.

Based on the above the beta unit's score is 30*%NBS* (IL2). We note that the research in the difference precast failure modes is ongoing and therefore, some aspects of the *Guidelines*, may potentially change nd hence affect the failure mode scores.

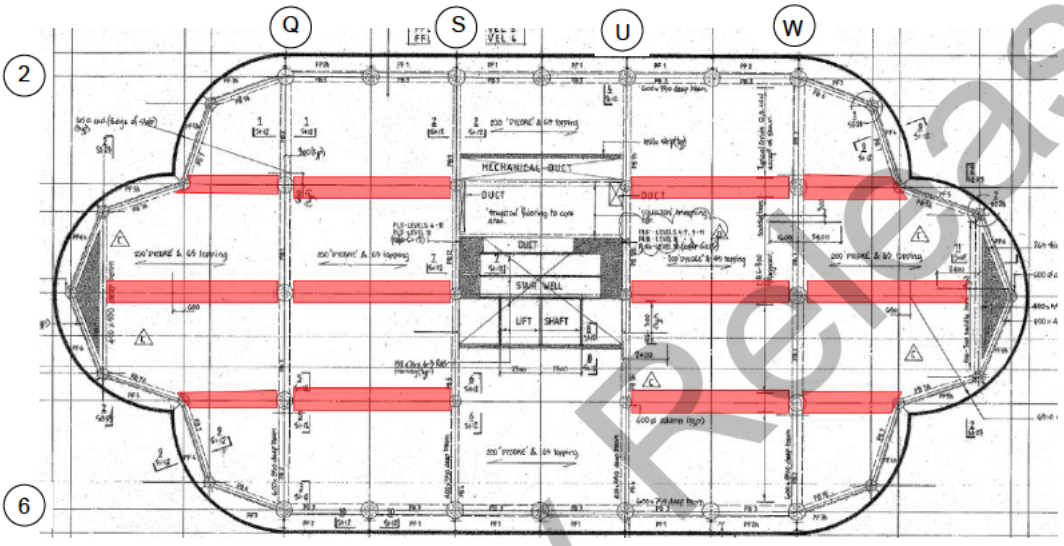

Figur 4.8 – B t slab locations.

4.4 Stahlton Ribs

In accordance *with Se tion C5 – Concrete Buildings – Proposed Revision to the Engineering Assessment Guidelines*, dated Novem er 20 8, the following precast flooring failure modes is considered:

- Precast Unit Seating Loss Failure
- Negative M men Fail re
- Positive Momen Failure

Und r the e g idelines, the *%NBS* of the precast units is given by the failure mode that has the lowest inter-stor y drift capacity.

We note that only the hollowcore units were retrofitted with seating angles and the Stahlton ribs with timber inf ll flooring, located in the basement levels and the core area in typical floor levels, were not retrofitted with seating angles.

4.4.1 Seating

As per the available drawings, the indicated seating on the RC beams is 30mm. Note that this measurement has been scaled off the drawings. From the *Guidelines*, factors such as the construction tolerance, beam

rotation, back of the unit spalling, and spalling of the concrete cover, was considered to determine the required seating length. We recommend on site measurements of the actual seating widths.

Under 100%ULS loading, the seating has insufficient length to ensure gravity carrying capacity is maintained. Based on the above, the seat length scores 30%*NBS* (IL2).

The measurement of the actual sheeting width is strongly recommended.

4.4.2 Positive and Negative Moment

Due to the locations of the rib and infill floor units, the units are not affected by beam elongation. Therefore, the Positive and Negative Moment score 100%*NBS*(IL2).

4.5 Original Retrofitted Precast Stairs

The Department of Building and Housing (now MBIE) issued their Practice Advisory 13 in response to concerns about stair collapse and damage observed in the Christchurch earthquake. The primary concern of this Practice Advisory is stairs with sliding support details in mid to high rise buildings. For these types of stairs, the recommendation is that the stair flights be detailed so that the stairs are free to slide but with sufficient sliding ledge support width available.

The stair sliding support was identified by ISPS as a structural weakness, primarily due to the following:

- Under lateral loading parallel to the stair, the stair flight is designed to slide at its bottom landing level to ensure the stairs to not "lock-up" and cause large displacement demands on the main structure.
- The 2014 seismic retrofit installed steel members underneath the RC stairs and increased the sliding stair seating length. The length of the sliding length is insufficient to accommodate the Guidelines' new estimated $2/S_p$ x ULS inter-storey displacements, construction tolerance, stair concrete cover spalling and beam elongation. We note that the required sliding length was increased (by a $2/S_p$ factor) due to code amendments after the original design was completed.
- If the stairs come into contact with the structure, the stair could act as an accidental brace between adjacent levels and have an undesirable effect on the behaviour of the main structure and may lose gravity carrying capacity.

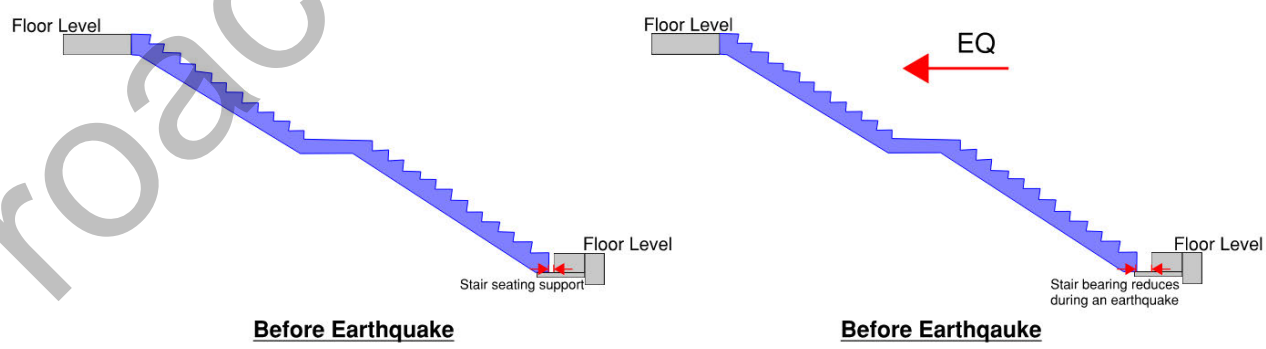

Figure 4.9 – Stair displacement before and during earthquake

4.6 2014 Steel Stairs

The stairs designed and constructed in 2014 are steel stairs that are tied in at the top of each flight and have movement allowances at the base support. However, the steel stairs are considered a structural weakness due to the following:

- The stairs rely on epoxy anchor connections for both gravity and lateral carrying capacity.
- In some locations, the connections are anchored into potential plastic hinges (locations where we expect localised damage in a severe earthquake). This is not desirable.
- Once the potential plastic hinges form in a design level earthquake, we expect large cracks to fo As a result, the epoxy anchors become unreliable to carry gravity loading.
- We note, epoxy anchor bolt capacities have been downgraded due to code amendments and C2 provisions after the seismic retrofit was complete. However, anchors in the beam poten ial as c hinge zones are considered non-compliant.

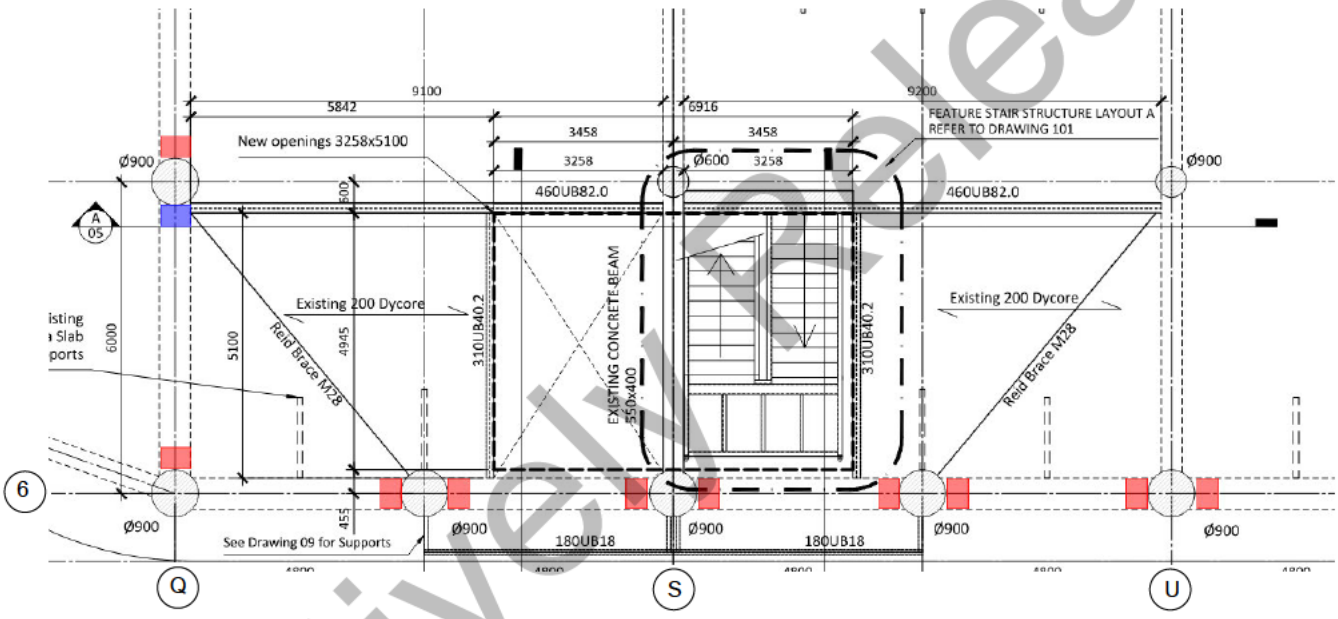

Figure 4.10 – Expected p astic inge locations around the 2014 stair void. Blue shows the hinge that the steel beam s anchored into. Red shows the other expected plastic hinge locations

4.7 Diaphragms

The diaphragm tension capacity and the connection of the diaphragm to the main vertical lateral resisting eleme ts was identified as a critical structural weakness (CSW). The score of the diaphragm at the roof level is 25%NBS(IL2). The remaining diaphragm levels score 30%*NBS*(IL2).

The purpose of a diaphragm is to connect the discrete vertical elements of a structure together in the horizontal plane at regular intervals and be capable of transferring inertia, transfer and soil pressure forces to the lateral elements. The importance and behaviour of diaphragms was often overlooked until the Christchurch Earthquake in 2011, so it is common to find them deficient in older structures. Moreover, the most common diaphragm reinforcing used in New Zealand until recently was non-ductile wire mesh.

Diaphragms at 33 Bowen Street are reinforced with a mixture of deformed bars and mesh. The mesh is non-ductile, preventing it from stretching and allowing the redistribution of load across the diaphragm. This is

undesirable in a diaphragm under seismic loading. Deformed bars, on the other hand, can stretch and allow the diaphragm to redistribute load, which is desirable in a diaphragm under seismic loading. The RC topping concrete thickness is 65mm thick.

As the number of storeys in the building exceeds the limitation of pESA recommended in NZS1170.5 C5.7.2, the building's acceleration profile was developed using the ASCE 7-16 method. From our analysis, peak ground acceleration (PGA) governs all the storeys expect for the top level.

These design accelerations/forces were then applied to the centre of mass of each diaphragm of the 3D ETABS model. For each diaphragm and for each direction of loading, the shear entering/exiting each vertic lateral resisting element (difference in shear above and below the level being considered) was extracted

Due to the complexity of the diaphragms (multiple penetrations, allowance for beam elongation, transfe for etc), the diaphragms demands were assessed using the Grillage Method as recommended in the *Gui elines*. It is essentially an automated strut and tie analysis method to obtain demands. Capacities w re d termined using Appendix A of NZS 3101:2006. From our analysis, non-ductile mesh tension capac y wa onsidered when the mesh had not ruptured under creep and shrinkage and gravity loads.

The diaphragm was identified as a critical structural weakness. This is due to the fol owing:

- Localised damage at the ends of each of the primary beams adjacent to the co mn is expected in a severe earthquake. As the RC beams develop plastic hinges due to repea ed art quake shaking cycles, they elongate and rotate, resulting in the concrete cover spalling.
- The frame is expected to elongate about its mid-point in each directio as he beams hinges develop, but the floor system does not.
- The consequence of the beam elongation is that the orner olumn nd beams may be pushed out and away from the corner of the floor. This reduces the a lowable l d transfer length to the MRFs.
- The large voids cut out in the floor diaphragm from the 2 14 stairs also significantly reduces the shear plane to transfer diaphragm load. We note that the slab around the stair opening was reinforced with fibre as part of the 2014 strengthening, however, the f re may rupture under beam elongation.
- The non-ductile mesh also has insufficient capac t to transfer diaphragm load to the frames. Once the tension capacity of the mesh is exceeded, the diaph agm effectively separates from the MRFs.

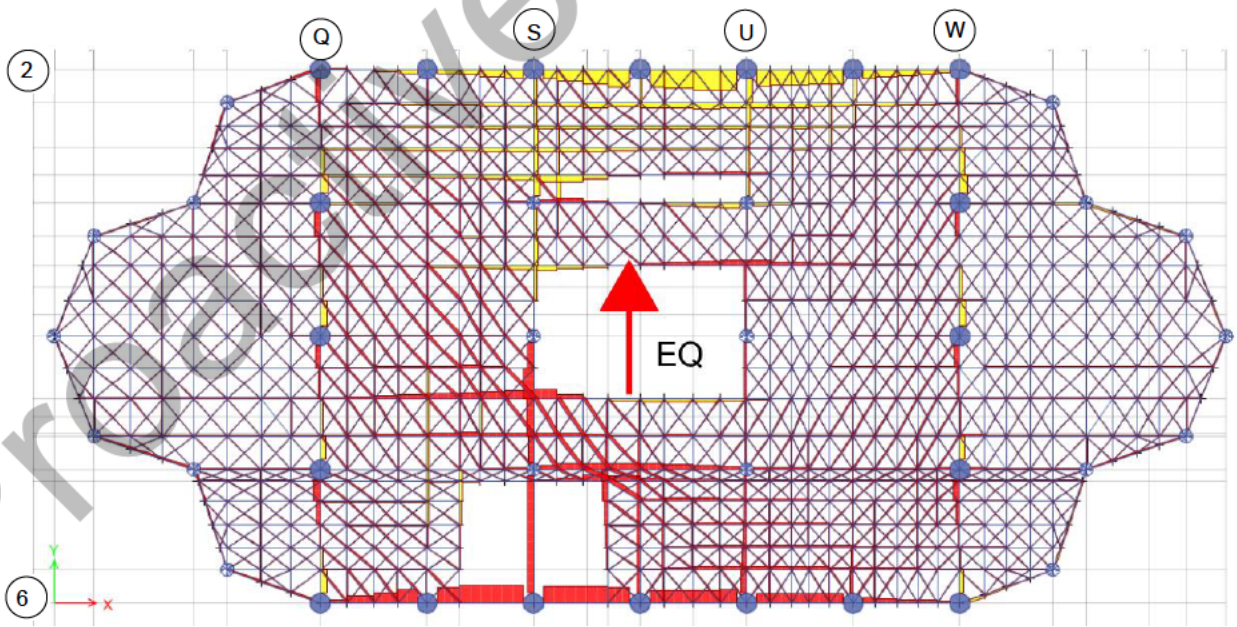

Figure 4.11– Grillage model of a typical floor plate. Yellow shows tension and red shows compression

4.8 Severe Structural Weaknesses

A Severe Structural Weakness (SSW) is a defined structural weakness that is potentially associated with catastrophic collapse and for which the capacity may not be reliably assessed based on current knowledge.

Based on the targeted elements, there are no SSWs identified for this building.

5 Potential Strengthening Options

We recommend the building is seismically retrofitted to a minimum rating of 67*%NBS* (IL2). The 67*%NBS*(IL2) level is regarded as the industry standard requirement for the strengthening of existing buildings. The strengthening options recommended are only of a schematic level detail, and a detailed design will be required for construction documents. It is noted that the schematic design presented is one structural solution and there may be other solutions for the building.

Listed below are some high-level retrofit solutions that could be implemented in order to improve the overall earthquake rating of the building to 67%NBS (IL2). We envisage that the strengthening work would be completed in stages (i.e. floor by floor or groups of floors) to minimise occupant disruption. We note that the noise due to drilling and other construction activities will have impact on the building occupants. The seismic retrofit would include:

- Increasing the shear capacity of the MRF beams in the longitudinal direction with FRP or steel plate to the side faces of the beams.
- Increasing the diaphragms' tension capacity by installing steel rods underneath the floor plate or steel plates recessed into the topping.
- Drill bolts completely through the RC beams for the 2014 stairs to provide a reliable gravity carrying support
- Retrofit the hollowcore precast units considering the following failure modes:
  - Beta Units. Install strongbacks to the underside of the beta units in accordance with the guidance in the "*Development and Validation of Retrofit Techniques for Hollow-core Floors*", dated 6 July 2021. The strongbacks are required at the Beta units' locations from level 2 – level 12. See Figure 5.1 for the strongback retrofit section.
  - Positive moment. Undertake onsite testing to confirm if the prestressing strands in the hollow-core units are poorly bonded or sufficiently bonded. If the strands are poorly bonded, then we suggest installing strongbacks to the underside of the units that are within the "elongation zone" from level 2 – level 12.
  - Negative Moment. Install strongbacks to the underside of all the units from level 2 – level 12. Selective weakening the starter/saddle bars in the concrete topping is also a possible retrofit solution.
- Retrofit the Stahlton units considering the following:
  - Undertake onsite investigations to confirm the Stahlton unit seating length
  - If the onsite investigations show that the seating length is still insufficient then we suggest increasing the seating length by bolting steel members to the underside of the Stahlton ribs. This is to occur on all levels.
- We note that the strengthening elements described are based on the targeted assessment and there may be other elements requiring retrofit. We recommend a full DSA prior to confirming any further strengthening.

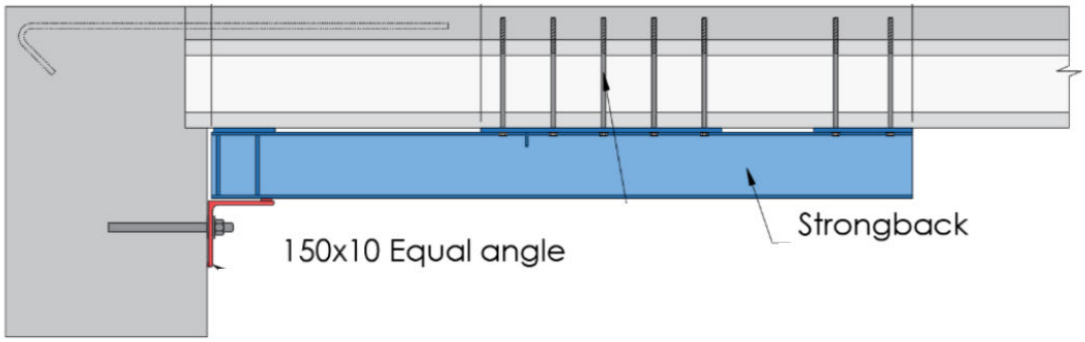

5.1 - Strong back retrofit section (source: *Development and Validation of Retrofit Techniques for Hollo -core Floors*, dated 6 July 2021)

6 Future Code Changes

6.1 Hazard Zone Factor

The hazard zone factor for Wellington, Z, used to determine the sei mic isk area and hence the design standard for new buildings, may be greater than previously as essed and u ed in the Earthquake actions design code NZS1170.5. This is based on the latest knowledge by GNS Science (GNS) on faults and the subduction zone around the Wellington region.

A future increase in the Hazard Factor may lead to an increa e in the design level for new buildings in Wellington and potentially may increase the standa d required for existing buildings to achieve 100*%NBS* (IL2) when assessed against that new standard. This increase is still being discussed and reviewed by industry experts with no fixed timeframe.

6.2 Basin Edge Ef ects

The 2016 Kaikōura earthquake exp sed the concept of the "basin edge effects." The basin edge efforts cause amplification of ground sha ing due to the presence of soft soils in the sedimentary basin and cause larger peak ground acc lerati ns than expected. The edge efforts are currently not incorporated in the Earthquake actions design code NZS 1170.5.

The basin edge ef ects have the potential to significantly increase the design standard for new buildings in particular locations n Wel ngton and potentially may increase the standard required for existing buildings to achieve 100%NB (IL2) when assessed against that new standard. The "basin edge effects" is currently being discussed and reviewed by industry experts with no fixed timeframe when it will be introduced into the design sta da ds

The 33 Bow n Street building may be affected by these effects.

6.3 Seismic Guidelines

Section C5 – Concrete Buildings – Proposed Revision to the Engineering Assessment Guidelines, dated November 2018, provides the latest engineering knowledge on aspects involved in the assessment of concrete buildings, and to reflect what engineers learned from the Kaikōura earthquake.

However, its impact to the industry to still being assessed before it can be incorporated into regulation. Therefore, some aspects of the Guidelines may potentially change and hence affect the standard required for existing buildings to achieve 100%*NBS* (IL2).

7 Yellow book vs Red Book

As stated above, the Amendment Section C5 “Yellow Book” represents the latest information available to engineers on various aspects of the seismic performance of existing concrete buildings. It gives a more accurate assessment of the expected seismic behaviour of a building than the original Section C5 of *The Seismic Assessment of Existing Buildings – Technical Guidelines for Engineering Assessments*, dated July 2017 (also known as the Red Book).

The Ministry of Business Innovation and Employment (MBIE) state that Engineers should use the revised version when carrying out assessments, with one exception. The only time engineers should use the existing Red book version is when establishing whether or not a building is potentially earthquake prone under the Building Act 2004. The July 2017 version is the only one formally recognised under this legislation.

We note that the diaphragm assessment undertaken in accordance with the Red or Yellow book version of the guidelines are likely to result in different scores when compared to one another due to the different analysis methodologies and assumptions used in the different versions. This is because under the Yellow Book, diaphragms with non-ductile mesh require a sophisticated grillage model that captures local stress concentrations. The simplified strut and tie model previously used in the Red Book to model the behaviour of the diaphragm does not capture these local stress concentrations. In addition, there is more guidance and general commentary in regard to the use of brittle mesh in terms of its strain compatibility and susceptibility of fracture.

We also note that the Yellow book provides clear and concise methodology for the assessment of precast floor systems, whereas previously under the Red Book, this was open to interpretation by different engineers. This may lead to different scores when compared to one another due to the different analysis methodologies and assumptions used in the different versions

The remaining elements (RC MRFs, column tie connections, stairs, FRP column strengthening and lateral deflection) undertaken in accordance with the Red or Yellow book version of the guidelines are likely to result in similar scores when compared to one another due to the similar analysis methodologies and assumptions.

8 Conclusions and Recommendations

8.1 Conclusion

A TDSA was completed in accordance with the updated *Section C5 – Concrete Buildings – Proposed Revision to the Engineering Assessment Guidelines* (known as the Yellow Book), dated November 2018. The targeted elements include:

1. RC Moment Resisting Frames - 40%*NBS*(IL2) in the longitudinal direction
2. Precast Flooring including Beta slab units - 30%*NBS*(IL2)
3. Column tie connection to the main structure - 100%*NBS*(IL2)
4. Diaphragm - 25%*NBS*(IL2)
5. Original Stairs - 90%*NBS*(IL2)
6. 2014 Stairs < 34%*NBS*(IL2)

7. FRP column strengthening- 100%*NBS*(IL2)
8. Precast facade panels - 100%*NBS*(IL2)

8.2 Recommendations

We recommend the building owner undertakes a full Detailed Seismic Assessment to ensure that all elements are reviewed and assessed prior to any strengthening design. Further geotechnical investigations are also required to confirm the subsoil classification of C.

Once this is completed, we recommend the building is seismically retrofitted to a minimum rating of 67%*NBS* (IL2). The 67%*NBS*(IL2) level is regarded as the industry standard requirement for the strengthening of existing buildings. The strengthening options recommended are only of a schematic level detail, and a detailed design will be required for construction documents. It is noted that the schematic design presented is one structural solution and there may be other solutions for the building.

The seismic retrofit would include elements as described in Section 5.

9 Explanatory Notes

- The information contained in this report has been prepared by Aurecon at the request of the Ministry of Education and is exclusively for the Ministry of Education use and reliance. It is not possible to make a proper assessment of this review without a clear understanding of the terms of engagement under which it has been prepared, including the scope of the instructions and directions given to and the assumptions made by Aurecon. The report will not address issues which would need to be considered for another party if that party's particular circumstances, requirements and experience were known and, further, may make assumptions about matters of which a third party is not aware. Aurecon accepts no responsibility or liability to any third party for any loss or damage whatsoever arising out of the use of or reliance on this report by that party or any party other than our Client.
- This report contains the professional opinion of Aurecon as to the matters set out herein, in the light of the information available to it during preparation, using its professional judgment and acting in accordance with the standard of care and skill normally exercised by professional engineers providing similar services in similar circumstances. Aurecon is not able to give any warranty or guarantee that all possible damage, defects, conditions or qualities have been identified.
- The report is based on information that has been provided to Aurecon from other sources or by other parties. The report has been prepared strictly on the basis that the information that has been provided is accurate, complete and adequate, except where otherwise identified during site investigation inspections. To the extent that any information is inaccurate, incomplete or inadequate, Aurecon takes no responsibility and disclaims all liability whatsoever for any loss or damage that resulting from any conclusions based on information that has been provided to Aurecon.
- The inspections of the building discussed in this report have been undertaken to inspect structure and confirm adequacy of the existing drawings. This report does not address building defects. Where site inspections were undertaken, they were restricted to visual inspections with intent to determine existing building main structural elements only.
- We have not undertaken a review of secondary elements such as ceilings, building services, plant and partitions.

Appendix A
Assessment Summary

1. Building Information

Building Name/ Description	Mātauranga House
Street Address	33 Bowen Street, Wellington
Territorial Authority	Wellington
No. of Storeys	12 plus 2 basement levels
Area of Typical Floor (approx.)	1100 m²
Year of Design (approx.)	1987
NZ Standards designed to	NZS1170, NZS3101 NZS 404
Structural System including Foundations	The lateral system in both directions are RC ductile moment resisting frames (MRFs). The RC frames of the building are substan al and well-detailed for the time and have many of th desirable details required for a modern building.
Does the building comprise a shared structural form or shares structural elemen s with any other adjacent titles?	N/A
Key features of ground profile and ide tifie geohazards	The site subsoil classification, in terms of NZS1170.5:2004 Clause 3.1.3, is Class C.

Previous strengthening and/ or significant alteration	In April 2014, Ian Smith Project Services (ISPS) Ltd, designed seismic retrofit works for the 33 Bowen Street building. The ISPS Design Features Report stated that once the seismic works were completed, the building would achieve a minimum of 97%*NBS* rating. The seismic works included: ▪ Installing steel catch brackets (75x125EAs) at the end of each hollowcore precast slab unit to increase available seating. ▪ Installing steel hangers at regular centres through the slab units spanning parallel to the main seismic frame beams, otherwise known as "alpha" slabs. ▪ Wrapping corner RC columns for the first four levels with a composite material to improve confinement and ductility over the height of the column. ▪ Installing steel members beneath each floor, t ie the perimeter columns back into the main st ucture. ▪ Installing steel members underneath the RC stairs to increase the sliding stair s ating ength. ISPS also designed a steel stair n w steel stair that was installed up the full height of the uild g, in the south-east portion of the building.
Heritage Issues/ Status	N/A
Other Relevant Information	N/A

2. Assessment Information

Consulting Practice	Aur con NZ Ltd.
CPEng Responsible, including: • Name • CPEng number • A statement of suita e skill and experience in the seismic ass ssment of existing buildings	9(2)(a) [redacted] ▪ Expert in seismic assessment of existing buildings

Documentation reviewed, including: • date/ version of drawings/ calculations • previous seismic assessments	▪ *Original Structural drawings*, Holmes Wood Poole & Johnstone Ltd, dated 1987. ▪ *Design Features Report, 33 Bowen Street, Wellington,* ISPS Ltd, dated April 2014 ▪ *Talavera Property Group 33 Bowen Street, Wellington Critical Structural Weakness (CSW) Upgrade Building Consent Drawings*, ISPS Ltd, dated June 2014 ▪ *Talavera Property Group 33 Bowen Street, Wellington Ministry of Education Accommodation, Alterations Diaphragm Strengthening and Feature Stair Structure Building Consent Drawings*, ISPS Ltd, dated November 2014 ▪ *33 Bowen Street – Ministry of Education Accommodation ISPS Addendum Report on Seismic Capacity of Exis ng Building Letter*, Aurecon, dated 5 August 2013 ▪ *33 Bowen Street – Ministry of Education Acc mmodation ISPS Addendum Report on Seismic Capac y of Existing Building, Aurecon*, dated 10 June 2015
Geotechnical Report(s)	N/A
Date(s) Building Inspected and extent of inspection	N/A
Description of any structural testing undertaken and results summary	N/A
Previous Assessment Reports	N/A
Other Relevant Information	N/A

3. Summary of Engineering Assessment Methodology and Key Parameters Used

Occupancy Type(s) and Importance Level	Commercial office (IL2)
Site Subsoil C ass	C
For a DSA:	
Summary of how Part C was applied, inc uding: • the analysis methodology(s) used from C2 • other sections of Part C applied	▪ Response Spectrum and nonlinear pushover analysis ▪ Part C5, Concrete Structures

Other Relevant Information	N/A

4. Assessment Outcomes

Assessment Status (Draft or Final)	Draft
Assessed *%NBS* Rating	25%NBS
Seismic Grade and Relative Risk (from Table A3.1)	D and 10-25 times greater than a new building.
For a DSA:	
Comment on the nature of Secondary Structural and Non-structural elements/ parts identified and assessed	
Describe the Governing Critical Structural Weakness	▪ RC Moment Resisting Frames i the longitudinal direction ▪ Precast Flooring including Beta slab units. ▪ Diaphragm ▪ Stairs

If the results of this DSA are being used for earthquake prone decision purposes, and elements rating <34*%NBS* have been identified (including Parts):	**Engine ring Statement of Struc ural W knes es and ocatio**	***Mode of Failure and Physical Consequence* Statement(s)**
Recommendations	Strengthening should be undertaken to increase the structure's rating to a minimum of 67%NBS(IL2) . .	

Appendix B
Definitions

ADRS	Acceleration-displacement response spectrum
Brittle	A brittle material or structure is one that fractures or breaks suddenly once its probable yield capacity is exceeded. A brittle structure has little tendency to deform before it fractures.
Critical structural weakness (CSW)	The lowest scoring structural weakness determined from a DSA. For an ISA all structural weaknesses are *potential* CSWs.
Damping	The value of equivalent viscous damping corresponding to the energy dissipated by the structure, or its systems and elements, during the earthquake. It is generally used in nonlinear assessment procedures. For elastic procedures, a constant 5% damping as per NZS 1170.5:200 is used.
Design level/ULS earthquake	Design level earthquake or loading is taken to be the seism load lev l corresponding to the ULS seismic load for the building the s e as defined by NZS 1170.5:2004 (refer to Section C3)
Detailed Seismic Assessment (DSA)	A seismic assessment carried out in acc rdanc with Part C of these guidelines
Diaphragm	A horizontal structural element (usually a s spended floor or ceiling or a braced roof structure) that is strongly conne ted to the vertical elements around it and that distributes earthquake later l forces to vertical elements, such as walls, of the primary latera system. Diaphragms can be classified as flexible or rigid.
Ductile/ductility	Describes the ability of a st ucture to ustain its load carrying capacity and dissipate energy when it is su jected to cyclic inelastic displacements during an earthqua e
Elastic analysis	Structural analy is t chnique that relies on linear-elastic assumptions and maintains the us of linear stress-strain and force-displacement relationships Imp cit material nonlinearity (e.g. cracked section) and g ometr c nonline ity may be included. Includes equivalent static analysis and modal esponse spectrum dynamic analysis.
Flexible diaphragm	A diaphr gm which for practical purposes is considered so flexible that it is unabl to transfer the earthquake loads to shear walls even if the floors/roof are w ll connected to the walls. Floors and roofs constructed of timber, a d or steel bracing in a URM building, or precast concrete without reinforced concrete topping fall in this category. A diaphragm with a maximum horizontal deformation along its length that is greater than or equal to twice the average inter-storey drift. In a URM building a diaphragm constructed of timber and/or steel bracing.
Initial eismic As essment (ISA)	A seismic assessment carried out in accordance with Part B of these guidelines. An ISA is a recommended first qualitative step in the overall assessment process.
onlinear analysis	Structural analysis technique that incorporates the material nonlinearity (strength, stiffness and hysteretic behaviour) as part of the analysis. Includes nonlinear static (pushover) analysis and nonlinear time history dynamic analysis.
Non-structural item	An item within the building that is not considered to be part of either the primary or secondary structure. Non-structural items such as individual window glazing, ceilings, general building services and building contents are not typically included in the assessment of the building's earthquake rating.

OTM	Overturning moment
Primary gravity structure	Portion of the main building structural system identified as carrying the gravity loads through to the ground. Also required to carry vertical earthquake induced accelerations through to the ground. May also incorporate the primary lateral structure.
Primary lateral structure	Portion of the main building structural system identified as carrying the lateral seismic loads through to the ground. May also be the primary gravity structure.
Probable capacity	The expected or estimated mean capacity (strength and deformation) of a member, an element, a structure, or foundation soils. For structural aspects this is determined using probable material strengths. For geotechnical issues the probable resistance is typically taken as the ultimate geotechnical resistance/strength that would be assumed for design.
Rigid diaphragm	A diaphragm that is not a flexible diaphragm
Secondary structure	Portion of the structure that is not part of either the primary lateral or primary gravity structure but, nevertheless, is required to transfer inertial and vertical loads for which assessment/design by a structural engine r would be expected. Includes precast walls, curtain wall framing systems, stairs and supports to significant building services items
Serviceability limit state (SLS)	Limit state as defined in AS/NZS 1170.0:2002 (or NZS 4203:19) being the point at which the structure can no longer be used as originally intended without repair
Severe structural weakness (SSW)	A defined structural weakness that is poten ia y ass ciated with catastrophic collapse and for which the apacit may n t b reliably assessed based on current knowledg
Simple Lateral Mechanism Analysis (Slam)	An analysis involving the combination of s mple strength to deformation representations of identified me anisms to determine the strength to deformation (push ver) relationship for the building as a whole
Single-degree-of-freedom (SDOF)	A simple inverted pendulum system with a single mass
Structural element	Combinations of st uctu al members that can be considered to work together. e.g. the piers and s andrels n a penetrated wall, or beams and columns in a moment resist ng frame
Structural member	Individual item of a building structure, e.g. beams, columns, beam/col mn joints, walls, spandrels, piers
Structural sub-system	Combi ation f structural elements that form a recognisable means of lateral or g avity load support for a portion of the building: e.g. moment resisti g frame, frame/wall. The combination of all the sub-systems creates the st uctural system.
Structural system	Combinations of structural elements that form a recognisable means of lateral or gravity load support, e.g. moment resisting frame, frame/wall. Also used to describe the way in which support/restraint is provided by the foundation soils.
Struc ral weakness (SW)	An aspect of the building structure and/or the foundation soils that scores less than 100%*NBS*. Note that an aspect of the building structure scoring less than 100%*NBS* but greater than or equal to 67%*NBS* is still considered to be a SW even though it is considered to represent an acceptable risk.
Ultimate limit state (seismic)	A term defined in regulations that describes the limiting capacity of a building for it to be determined to be an earthquake-prone building. This is typically taken as the probable capacity but with the additional requirement that exceeding the probable capacity must be associated with the loss of gravity support (i.e. creates a significant life safety hazard).
Ultimate limit state (ULS)	A limit state defined in the New Zealand loadings standard NZS 1170.5:2004 for the design of new buildings

XXX%NBS	The ratio of the ultimate capacity of a building as a whole or of an individual member/element and the ULS shaking demand for a similar new building on the same site, expressed as a percentage. Intended to reflect the expected seismic performance of a building relative to the minimum life safety standard required for a similar new building on the same site by Clause B1 of the New Zealand Building Code.
XXX%ULS shaking (demand)	Percentage of the ULS shaking demand (loading or displacement) defined for the ULS design of a new building and/or its members/elements for the same site. For general assessments 100%ULS shaking demand for the structure is defined in the version of NZS 1170.5 (version current at the time of the assessment) and for the foundation soils in NZGS/MBIE Module 1 of the Geotechnical Earthquake Engineering Practice series dated March 2016. For engineering assessments undertaken in accordance with the EPB methodology, 100%ULS shaking demand for the structure is defined in NZS 1170.5:2004 and for the foundation soils in NZGS/MBIE Module 1 of the Geotechnical Earthquake Engineering Practice series dated March 2016 (with appropriate adjustments to reflect the required use of NZS 1170.5:2004). Refer also to Section C3.

Appendix C

Importance Level Description

Importance Levels for Building Types – New Zealand Structures

Importance Level	Comment	Examples
1	Structures presenting a low degree of hazard to life and other property	Structures with a total floor area of <30 m^2 Farm buildings, isolated structures, towers in rural situations Fences, masts, walls, in-ground swimming pools
2	Normal structures and structures not in other importance levels	Buildings not included in Importance Levels 1, 3 or 4 Single family dwellings Car parking buildings
3	Structures that as a whole may contain people in crowds or contents of high value to the community or pose risks to people in crowds	Buildings and facilities as follow: (a) Where more than 300 people can congregate one rea (b) Day care facilities with a capacity reate than15 (c) Primary school or secondary school aciliti s with a capacity greater than 250 (d) Colleges or adult education fa ilities with capacity greater than 500 (e) Health care facilitie with capacity o 50 or more resident patients but not h ving su gery or emergency treatment facilities (f) Airport terminals, p inc pal railway stations with a capacity greater than 250 (g) Correctional institutions (h) Multi-occupa cy residential, commercial (including shops), industrial offic and retailing buildings designed to acc mmod te more than 5000 people and with a gross area greate than 10 00m^2 (i) P lic as embly buildings, theatres and cinemas of greater than 1000m^2 Eme gency medical and other emergency facilities not designated a post di aster Po er-generating facilities, water treatment and wastewater trea ment facilities and other public utilities not designated as post-disaster Buildings and facilities not designated as post-disaster containing hazardous materials capable of causing hazardous conditions that do not extend beyond the property boundaries
4	Structu es w t special post-disaster functions	Buildings and facilities designated as essential facilities Buildings and facilities with special post-disaster function Medical emergency or surgical facilities Emergency service facilities such as fire, police stations and emergency vehicle garages Utilities or emergency supplies or installations required as backup for buildings and facilities of Importance Level 4 Designated emergency shelters, designated emergency centres and ancillary facilities Buildings and facilities containing hazardous materials capable of causing hazardous conditions that extend beyond the property boundaries
5	Special structures (outside the scope of this Standard—acceptable probability of failure to be determined by special study)	Structures that have special functions or whose failure poses catastrophic risk to a large area (e.g. 100 km^2) or many people (e.g., 100 000) Major dams, extreme hazard facilities

ANNUAL PROBABILITY OF EXCEEDANCE

Design working life	Importance level	Annual probability of exceedance for ultimate limit states			Annual probability of exceedance for serviceability limit states	
		Wind	Snow	Earthquake	SL S1	SLS2 Importance level 4 only
Construction equipment, e.g., props, scaffolding, braces and similar	2	1/100	1/50	1/100	1/25	
Less than 6 months	1 2 3 4	1/25 1/100 1/250 1/1000	1/25 1/50 1/100 1/250	1/25 1/100 1/250 1/1000	— 1/25 1/25 1/25	
5 years	1 2 3 4	1/25 1/250 1/500 1/1000	1/25 1/50 1/100 1/250	1/25 1/250 1/500 1/1000	— 1/25 1/25 1/25	— — — 1/250
25 years	1 2 3 4	1/50 1/250 1/500 1/1000	1/25 1/50 1/100 1/250	1/50 1/250 1/500 1/100	— 1/2 1/25 1/25	— — — 1/250
50 years	1 2 3 4	1/100 1/500 1/1000 1/2500	1/50 1/150 1/250 1/500	1/100 1/500 1 1000 1/2500	— 1/25 1/25 1/25	— — — 1/500
100 years or more	1 2 3 4	1/250 1/1000 1/2500 *	1/150 1/250 1/500 *	1/25 1/100 1/2500 *	— 1/25 1/25 1/15	— — — *

* For Importance Level 4 structures with design working life of 100 years or more, the design events are determined by a hazard anal is bu need to have probabilities less than or equal to those for importance level 3.

Design events for import nce le el 5 structures should be determined on a case by case basis.

Document prepared by

Aurecon New Zealand Limited
Spark Central
Level 8, 42-52 Willis Street
Wellington 6011

PO Box 1591
Wellington 6140
New Zealand

T +64 4 472 9589
F +64 4 472 9922
E wellington@aurecongroup.com
W aurecongroup.com

aurecon

Bringing ideas to life

Aurecon offices are located in:
Angola, Australia, Botswana, China,
Ghana, Hong Kong, Indonesia, Kenya,
Lesotho, Mozambique,
Namibia, New Zealand, Nigeria
Philippines, Qatar, Rwanda, Singapore, S uth Africa,
Swaziland, Tanzania, Tha a d Ug da
United Arab Emirates, Vietnam, Zambia,